Lesson A3–1

Planning and Designing Projects

Unit A. Mechanical Systems and Technology

Problem Area 3. Construction Systems

Lesson 1. Planning and Designing Projects

New Mexico Content Standard:

Pathway Strand: Power, Structural and Technical Systems

Standard: **V:** Read and relate structural plans to specifications and building codes.

Benchmark: **V-A:** Examine blueprints and local codes to develop a logical construction plan.

Performance Standard: **1.** Identify parts of a plan or blueprint. **2.** Identify criteria for different views of a plan or blueprint. **3.** Locate elements of a construction plan and develop a construction plan.

Student Learning Objectives. Instruction in this lesson should result in students achieving the following objectives:

1. Explain how to read project plans and blueprints.
2. Explain how to draw project plans.
3. Discuss the development of a cutting list and a bill of materials.

List of Resources. The following resources may be useful in teaching this lesson:

Recommended Resources. One of the following resources should be selected to accompany the lesson:

Burke, Stanley R., and T.J. Wakeman. *Modern Agricultural Mechanics*. Danville, Illinois: Interstate Publishers, Inc., 1992. (Chapter 1)

Burkybile, Carl. *Planning a Woodworking Project*. University of Illinois: Information Technology & Communication Systems (U3051a).

Burkybile, Carl. *Planning a Woodworking Project Transparency Set.* University of Illinois: Information Technology & Communication Systems.

Phipps, Lloyd J., et al. *Introduction to Agricultural Mechanics,* Second Edition. Upper Saddle River, New Jersey: Prentice Hall Interstate, 2004. (Textbook, Chapter 10)

Other Resources. The following resources will be useful to students and teachers:

Haun, Larry. *Homebuilding Basics: Carpentry*. Newtown, Connecticut: Tauton Press, 1999. (Chapter 3)

Wagner, John D. *House Framing*. Upper Saddle River, New Jersey: Creative Homeowner, 1998. (Chapter 2)

List of Equipment, Tools, Supplies, and Facilities

Writing surface
Overhead projector
Transparencies from attached masters
Copies of student lab sheet
Basic drafting tool set
Set of blueprints and/or project plans

Terms. The following terms are presented in this lesson (shown in bold italics):

Architectural scale
Bill of materials
Border line
Blueprint
Center line
Cleaning pad
Compass
Computer aided drafting (CAD)
Construction procedure
Cutting list
Dimension line

Divider
Drafting paper
Drafting pencils
Drafting tape
Drawing board
Dusting brush
Eraser shield
Extension line
Fasteners
Finish
Full-size drawing
Hardware
Hidden object line
Isometric drawing
Mechanical drawing
Object line
Pencil block eraser
Pencil lead pointer
Protractor
Scale drawing
Sketch
T-square
Templates
Triangles

Interest Approach. Use an interest approach that will prepare the students for the lesson. Teachers often develop approaches for their unique class and student situations. A possible approach is included here.

Ask students why a project needs to be planned on paper. Show copies of project plans and building blueprints. Explain that planning "on paper" will help avoid costly mistakes and the purchase of unneeded materials. Lack of planning results in time wasted on trips to the lumber yard to buy one more board, a few more nails, or another pair of hinges. "Paper planning" with scale drawings will help spot potential problems. Trial and error construction (unplanned construction) results in wasted time and materials. Stress to the students that when planning is done on paper, problems can be corrected with a pencil eraser instead of a hammer, wrecking bar, and saw.

Summary of Content and Teaching Strategies

Objective 1: Explain how to read project plans and blueprints.

Anticipated Problem: How are project plans and blueprints read or interpreted?

I. An idea comes alive when it is transferred to the paper. Sketches and drawings are the written language that will tell you what must be built and the materials needed for the job. Lines, symbols, and dimensions convey the project to the mind of the builder. It is important to be able to read and draw sketches and scale drawings.

A. A ***sketch*** is the original idea put on paper in a rough form. It is not drawn to scale. A ***full-size drawing*** is a drawing the exact size of the project to be built. A ***scale drawing*** is drawn proportionally to the size of the actual project with a label that indicates its size in comparison to the project. For example, the scale might be ¼ inch to one foot.

B. A project can be represented by one, two, or three views. If three views are used, they are generally the top, front, and right side. An ***isometric drawing*** is a three-dimensional drawing. It is difficult to draw, especially to scale. When isometric drawings are made the corner lines are vertical and the front and side lines are drawn at an angle of 30 degrees to the horizontal.

C. Several types of lines are used in drawings. Using the wrong type of line is like using an incorrect word. The ***border line*** is darker than any lines in the drawing and is used around the outside of the drawing like a frame for a picture. The ***object line*** is the darkest line of the drawing and stands out to show the exact shape of the object. The ***hidden object line*** is medium in darkness, and represents edge lines that can't be seen. A ***dimension line*** marks the dimensions of an object such as length, width, thickness, and diameter of holes. This is a fine line with an arrowhead placed at each end and the number representing the dimension placed in the center of or on the dimension line. An ***extension line*** is a fine line placed at the end of the dimension line referring the reader to the part of the object being dimensioned. ***Center lines*** are light, broken lines of alternating short and long dashes.

D. Plans are typically prepared with an original and copies. The copies may be collectively known as plans. A ***blueprint*** is a copy of an original plan that is produced with a process that produces white lines and other images on a blue background. Blueprints are being replaced with plans made by copying machines. These machines show lines and details in black or blue on white paper. Typical paper size is 18 × 24 inches but other sizes can be used, depending on the size of the drawing. ***Computer aided drafting (CAD)*** generates drawings on a computer which are then printed with a laser printer or a machine known as a plotter. Some people refer to all large, detailed plans as blueprints regardless of how they have been prepared.

E. Reading project plans are like following a road map. You know you can't visualize everything you will see along the way, but if you follow the lines and symbols properly, you will

arrive at your destination. Learn to follow the plans step-by-step, and you will complete the project.

Have students read the suggested chapter in the recommended resource text. Discuss the difference between pictures and drawings. Pictures are helpful but drawings include dimensions. Use TM: A3–1A to show drawing views, TM: A3–1B to show types of drafting lines, and TM: A3–1C to show a floor plan. Stress the importance of planning projects on paper.

Objective 2: Explain how to draw project plans.

Anticipated Problem: What tools and procedures are used to draw project plans?

II. A ***mechanical drawing*** is a detailed drawing that is carefully and accurately drawn to scale using various drawing instruments. Such drawings are the means of communication between those who prepare plans and the people who are builders. Before attempting to draw a detailed plan, you must select suitable instruments and materials.

A. A ***drawing board*** is a 20 × 24 inch piece of knot-free softwood. The drawing board should have square corners and straight edges so that the T-square can be used to square from the board.

B. A ***T-square*** is used to position the paper square on the board and as a straight edge to draw horizontal lines. When the head or short part of the square is held firmly against the board, the blade will extend squarely across the board.

C. Drawings are done on ***drafting paper*** which comes in white, cream, and light green and in sizes ranging from 8½ × 11 to 17 × 22.

D. ***Drafting tape*** is used to fasten the paper to the drafting board. It is not as likely to damage the paper when removed as scotch tape or masking tape would.

E. A ruler marked in 16ths of an inch may be used for most drawings. Some drawings might be done in metric (millimeters, centimeters, meters) rather than the standard English measurements (inches, feet, yards). An ***architectural scale*** is a three-sided ruler with six different measuring scales often used by professionals.

F. ***Triangles*** are held tightly against the T-square to form a straightedge to mark vertical lines. A 45–45–90 degree triangle and a 30–60–90 degree triangle are commonly used.

G. A ***protractor*** is used to measure angles from 0 to 180 degrees.

H. ***Drafting pencils*** are made in 18 different grades of hardness and have the grade stamped near the end of the pencil. Since the pencil has no eraser it could be sharpened from either end, but it should be sharpened from the unmarked end so the hardness grade is not removed. 2H pencils are recommended for beginning draftsmen. See *Modern Agricultural Mechanics* pp. 6–7 for more information on pencil grades. Only a sharp pencil can produce accurate, clean-cut, dark lines. A dull pencil produces fuzzy, indefinite, sloppy lines. After sharpening, rotate the pencil on a piece of sandpaper, rough paper, or a fine file to finish the point. Professionals use a device called a ***pencil lead pointer*** that contains graphite. The pencil is rotated to finish the point and then the graphite particles are removed by sticking the pencil point in a piece of styrofoam.

I. A ***compass*** is an adjustable device with a point on one side and a pencil on the other side and is used to draw circles. A ***divider***, in contrast, has a point on both legs and is used to transfer a measured distance to another location. It may be faster and more accurate than using a ruler.

J. ***Templates*** are metal or plastic objects with a variety of circles or irregular curves that may be used to help draw circles and curves.

K. A pink or red ***pencil block eraser*** is used to remove construction lines and other unwanted lines. An ***eraser shield*** is a piece of metal or plastic used to protect areas while unwanted lines are erased. A ***dusting brush*** is a small brush used to remove eraser fragments from the drawing. When the drawing is completely finished use a ***cleaning pad***, a pad containing special cleaning powder, to help remove any remaining loose graphite particles from the drawing. A finished drawing should have the name of the project, your name, and scale used in legible, neat, well balanced, and attractive lettering. Block lettering is probably the most popular type of lettering.

Assign student readings in the recommended textbooks listed in the references. They contain basic information on this topic. Show a set of drawing tools and supplies. Learn the names of each and illustrate how they are used to develop a drawing. TM: A3–1D illustrates the equipment used in making drawings.

Objective 3: Discuss the development of a cutting list and a bill of materials.

Anticipated Problem: How are a cutting list and a bill of materials developed?

III. Drawing dimensions are used to take the next step in the planning process. An order must be prepared for the lumber yard and instructions must be prepared for the builder.

A. The ***cutting list*** is a list of all pieces giving exact dimensions of each board needed to complete the project. It is used by the builder to cut purchased lumber into the sizes needed to assemble the project.

B. The ***bill of materials*** is a listing of the kinds and amount of lumber, fasteners, hardware, and finish necessary for completing the project. The bill of materials is in sizes and quantities that the lumberyard worker can use to fill your order. The plans should include the lumber dimensions, grade, and species of wood. An example would be one 12 foot 2 × 4, construction grade, white pine. The ***fasteners*** section, sometimes referred to as rough hardware, needs to have the number, size, and kind of fastener (nails, screws, bolts, and glue). An example from a bill of materials would be 12 flat head standard slot 1½ inch eight gauge steel wood screws. Hinges, catches, knobs, handles, and locks are all classified as ***hardware*** or finish hardware. An example of hardware would be one pair of 2 inch brass tee hinges. ***Finish*** is used to protect and beautify a project. It includes paints, stains, wood preservatives, and clear sealers.

C. An optional fifth section of the bill of materials would be labor. Custom built projects are bid based on the cost of materials and the estimated hours needed to complete the project. Even if the project is to be built for yourself, estimating the hours helps to determine whether it makes sense to continue the plan to build the project.

D. Whether your project is large or small, you should develop a written step-by-step construction procedure. A ***construction procedure*** is a list of steps for making each part, assembling the project, and finishing it. It should be detailed enough for someone else to construct the project. Developing the construction procedure teaches students to analyze tasks, solve problems, and organize solutions.

Have students read the chapters that are referenced in the recommended resource texts. Look at the sample cutting list TM: A3–1E, bill of materials TM: A3–1F, and construction procedure TM: A3–1G. Use LS: A3–1A project plan form to plan a project of the teacher or student's choice.

Review/Summary. Use the transparencies, sample project plans, and the mechanical drawing tools to review the planning process. Stress the importance of paper planning as a way to correct mistakes simply and inexpensively with a pencil eraser. Emphasize the skills of critical thinking and problem solving that are gained through the planning process.

Application. Use LS: A3–1A to develop a project plan.

Evaluation. Use the written test and the student developed project plan.

Answers to Sample Test:

Part One: Matching

1 = b, 2 = j, 3 = a, 4 = h, 5 = d, 6 = c, 7 = f, 8 = e, 9 = i, 10 = g

Part Two: Completion

1. drafting tape
2. architectural
3. compass
4. divider
5. T-square
6. eraser shield
7. template
8. triangle
9. Fasteners
10. Hardware

Part Three: Short Answer

1. Planning on paper helps to identify problems that can be corrected with an eraser instead of a wrecking bar. It saves time and money by eliminating extra trips to the lumber yard.

2. A cutting list states the exact sizes that need to be cut in order to build the project. It is used by the builder. The bill of materials is a list of materials in sizes that can be purchased and is used by the lumber yard worker to fill the order.
3. The bill of materials includes: lumber, fasteners, hardware, and finish.
4. Once the pencil is sharpened, develop a fine point by rolling the point on rough paper or fine sandpaper. Use a pencil lead pointer if one is available. Clean the point by poking it in a block of styrofoam to remove graphite particles.

Sample Test Name_____

Test

Lesson A3–1: Planning and Designing Projects

Part One: Matching

Instructions. Match the term with the correct response. Write the letter of the term by the definition.

a. border line	e. extension line	i. scale
b. CAD	f. full size	j. sketch
c. center line	g. isometric	
d. dimension line	h. object line	

_____ 1. Drawings generated by computer.

_____ 2. A rough idea put on paper without precise measurements.

_____ 3. A very dark line around the drawing.

_____ 4. The darkest line of the drawing that stands out to show the exact size and shape of the item.

_____ 5. A fine line with arrows on the end.

_____ 6. A light, broken line of alternating short and long dashes.

_____ 7. Drawing is the same size as the actual object.

_____ 8. A fine line placed at the end of a dimension line.

_____ 9. A drawing that is proportional to the size of the actual project.

_____ 10. A drawing that is three-dimensional.

Part Two: Completion

Instructions. Provide the word or words to complete the following statements.

1. Drafting paper is fastened to a drafting board with _____ _____.
2. A(n) _____ scale is a three-sided ruler with six different measuring scales that is often used by professionals.
3. A(n) _____ is an adjustable device with a point on one side and a pencil on the other used to draw circles.
4. A(n) _____ has a point on both legs and is used to transfer a measured distance to another location.
5. A(n) _____ _____ is used as a straightedge to draw horizontal lines.

6. An _____ _____ is used to protect areas while erasing is done.
7. A(n) _____ is a metal or plastic object with a variety of circles and irregular curves.
8. A(n) _____ is held tightly against the T-square to be used as a straightedge to draw vertical lines.
9. _____ are nails, screws, bolts, and glue.
10. _____ examples include hinges, catches, pulls, knobs, and locks.

Part Three: Short Answer

Instructions. Provide information to answer the following questions.

1. Why is planning on paper important?

2. Compare a cutting list to a bill of materials.

3. What are the four categories in a bill of materials?

4. Describe how a fine point is developed on a sharpened pencil.

PROJECT DRAWINGS

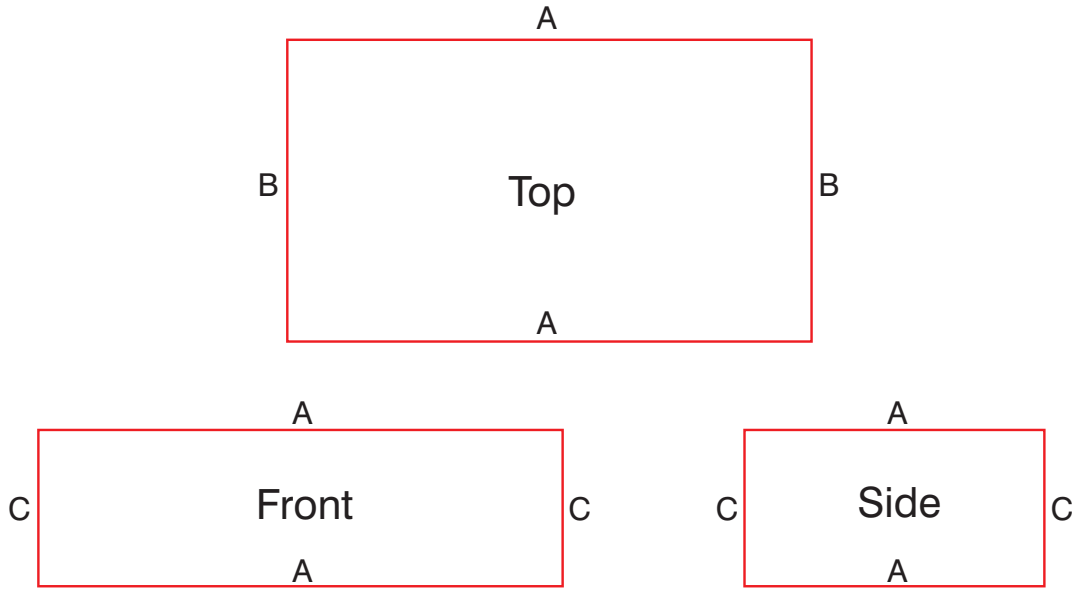

Three-View Drawings
(showing a front, top, and side view)

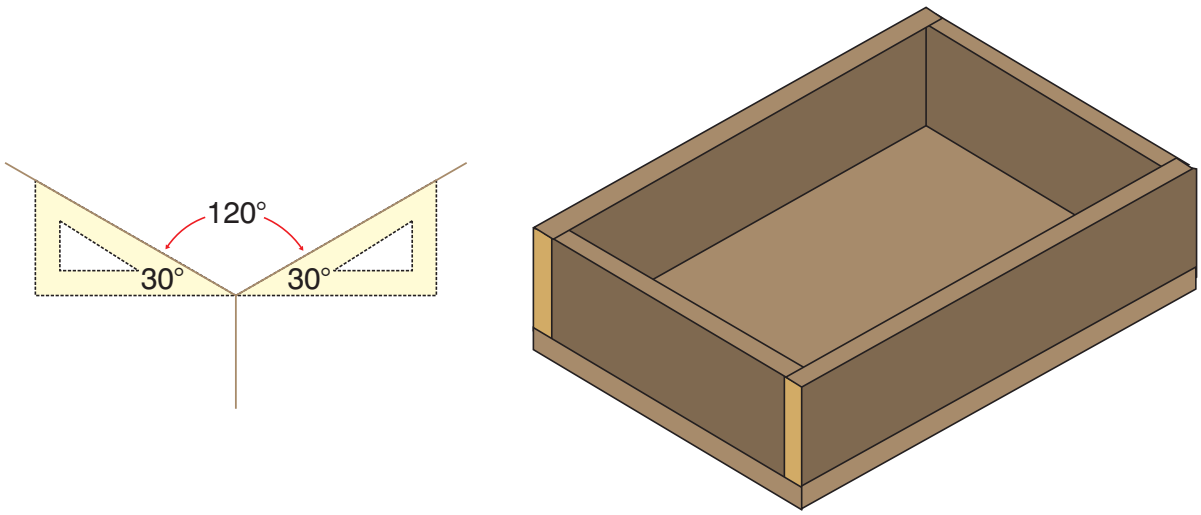

Isometric Drawing

(Courtesy, Interstate Publishers, Inc.)

TYPES OF DRAFTING LINES

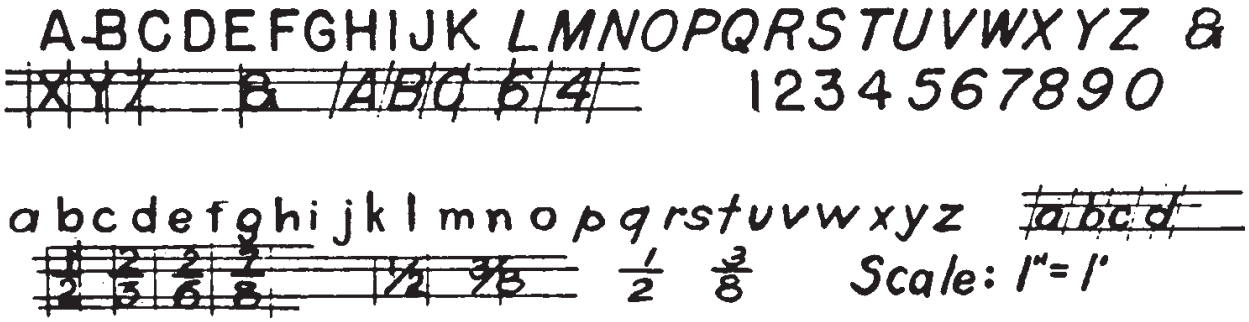

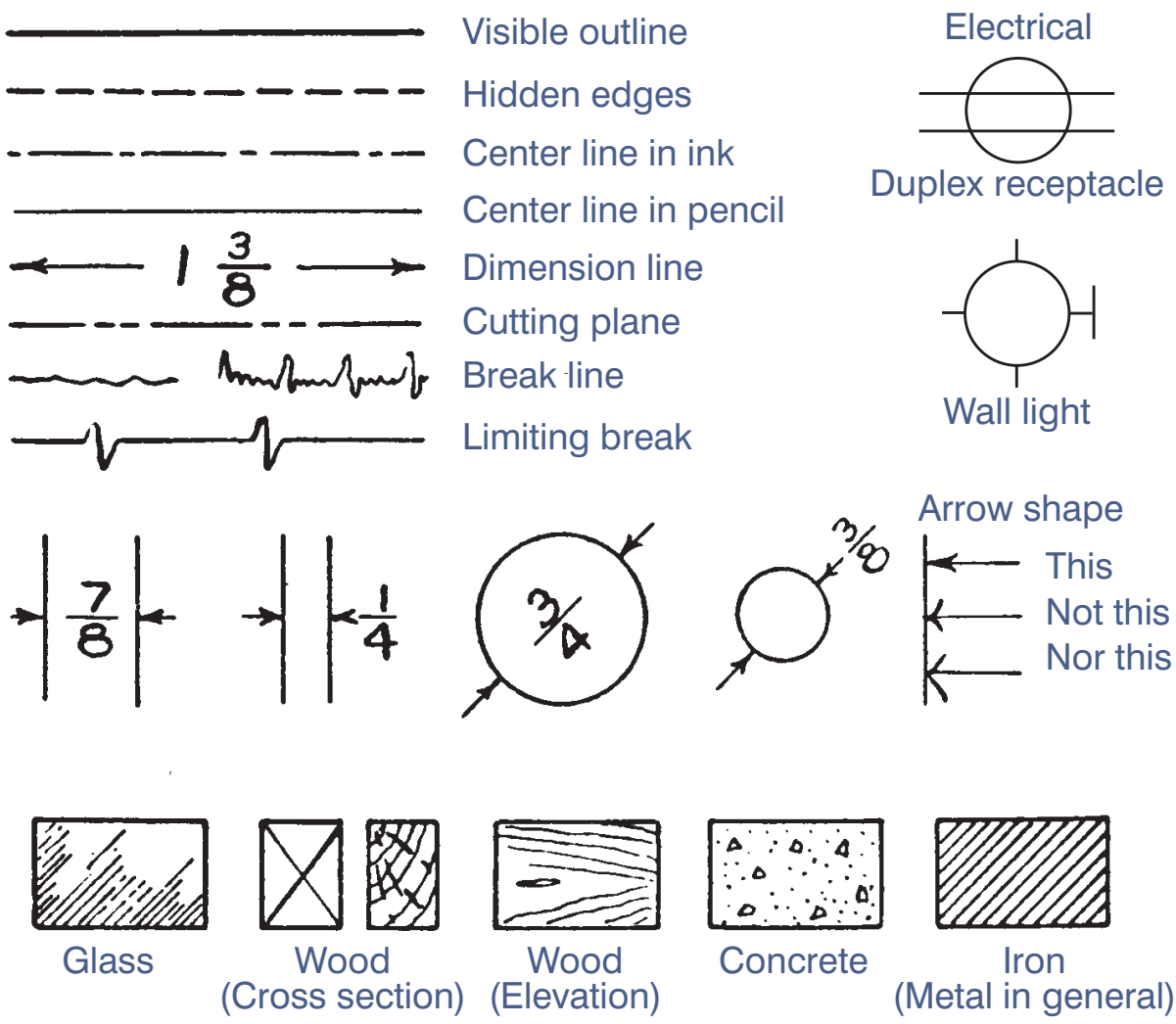

(Courtesy, Interstate Publishers, Inc.)

SAMPLE FLOOR PLAN

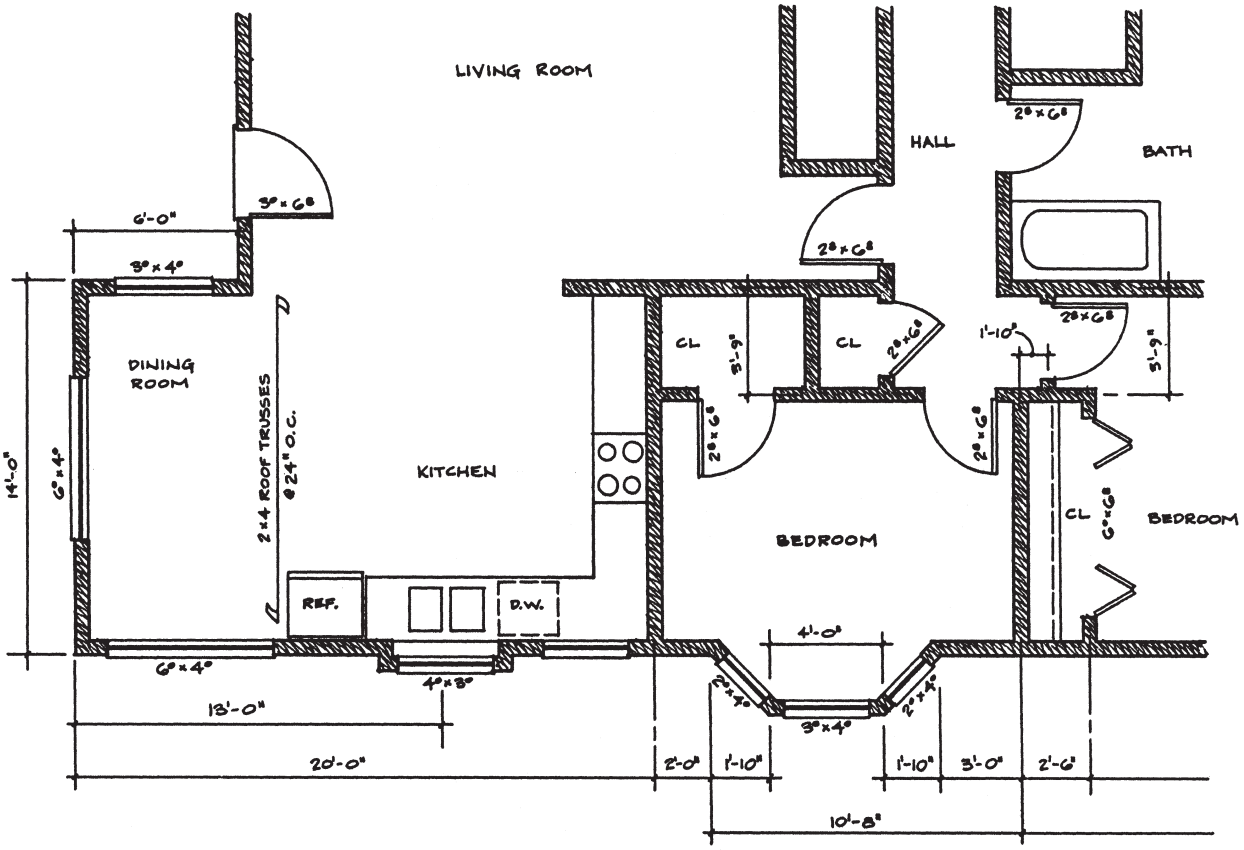

TM: A3–1D

EXAMPLES OF DRAFTING TOOLS AND SUPPLIES

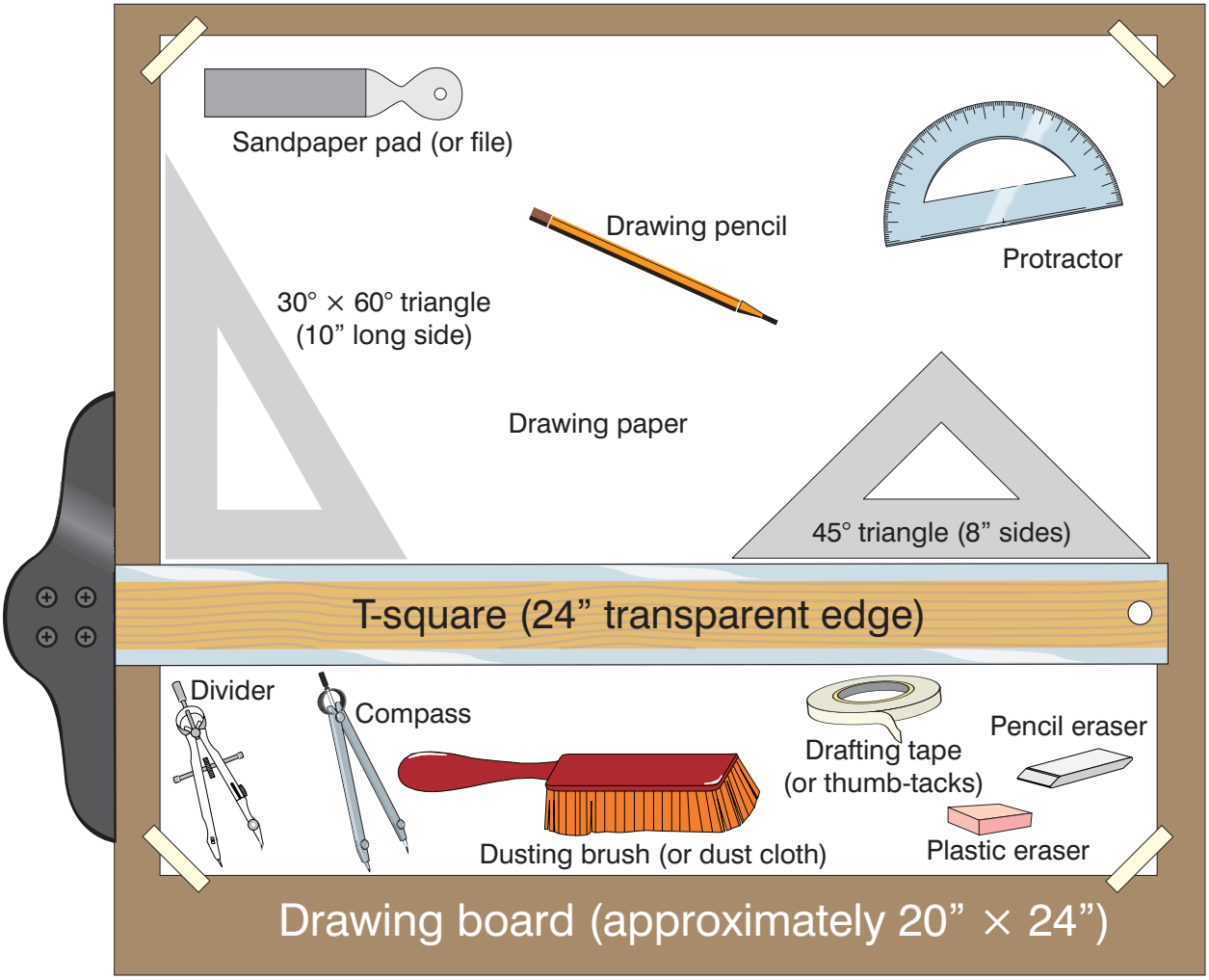

(Courtesy, Interstate Publishers, Inc.)

DRAWINGS AND CUTTING LIST FOR 6 FOOT PICNIC TABLE

DRAWINGS (top, front, and/or side views). Attach photographs, blueprints, etc., if available.

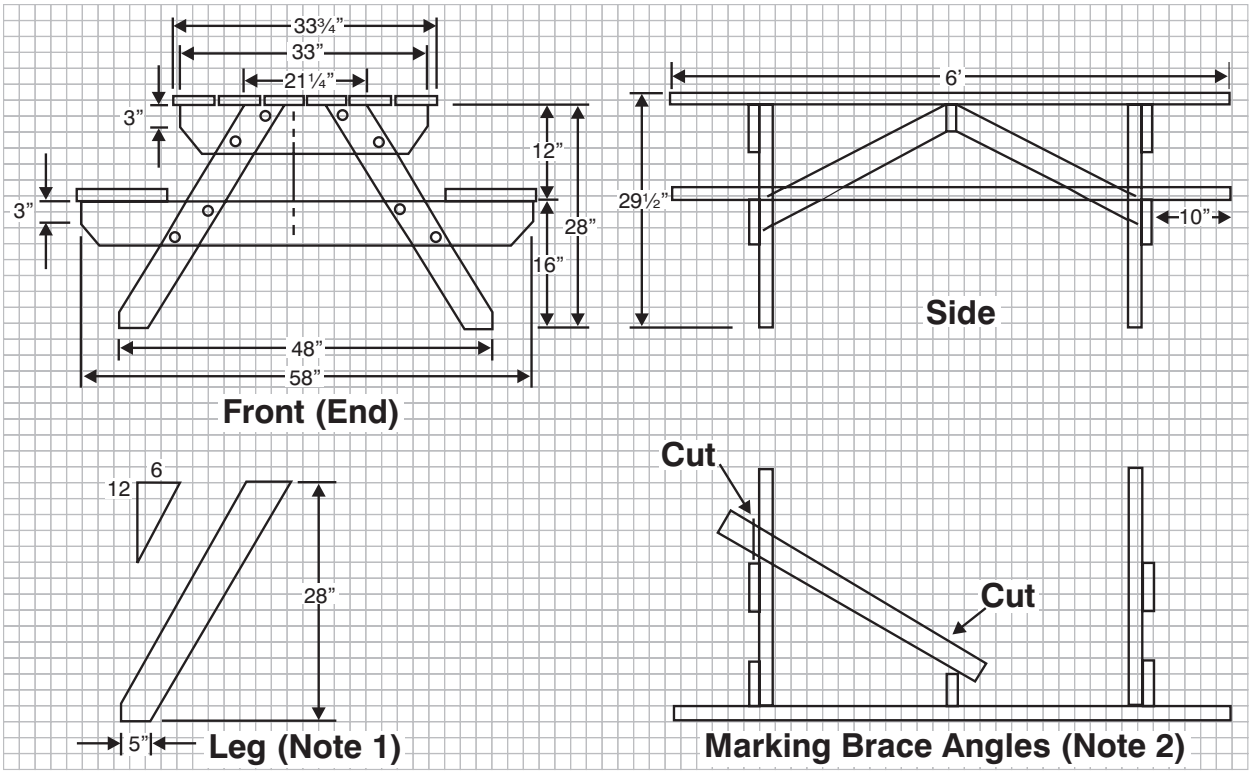

CUTTING LIST

Number	Sizes Needed	Purchased dimensions	Use
2	2 × 10 × 6’	1 — 2 × 10 × 12’	Seats
6	2 × 6 × 6’	3 — 2 × 6 × 12’	Tabletop
4	2 × 6 × 36” (Note 1)	1 — 2 × 6 × 12’	Legs
2	2 × 6 × 58”	}	Seat Cleats
2	2 × 6 × 33’	} 1 — 2 × 6 × 16’	Top Cleats
1	2 × 4 × 33”	}	Top Spacer
2	2 × 4 × 36” (Note 2)	} 1 — 2 × 4 × 10’	Angle Braces

Note 1: Mark one leg with the proper angles on a 2 × 6 × 12’ and cut it. Use this leg as a pattern for the other 3 legs.

Note 2: Lay the 36-inch long 2 × 4 in position as shown above. Use a straightedge against the seat cleat and the top spacer to mark the angles for cutting.

TM: A3–1F

PICNIC TABLE BILL OF MATERIALS

BILL OF MATERIALS

LUMBER

Number	Dimensions	Grade and Species of Wood	Cost
1	2 × 20 × 12’	Construction—Douglas Fir	
4	2 × 6 × 12’	Construction—Douglas Fir	
1	2 × 6 × 16’	Construction—Douglas Fir	
1	2 × 4 × 10’	Construction—Douglas Fir	

NOTE: Construction grade white woods could be used if Douglas Fir is not available.

FASTENERS

Number	Size	Kind of Fastener	Cost
16	3/8” × 3½”	Zinc coated carriage bolts	
2 lb.	16d	Common coated or galvanized nails	

HARDWARE

Number	Size	Kind of Hardware	Cost
none			

FINISH

Number	Size of Container	Kind of Finish	Cost
1	Quart	Exterior paint	

TOTAL _____

TM: A3–1G

PICNIC TABLE CONSTRUCTION PROCEDURE

1. Read all the steps in this Construction Procedure before you start marking or cutting wood.
2. Mark one leg on a 2" × 6" × 12'. Use 6 and 12 on the framing square to mark the angles on the legs. Have the teacher check your marks and then cut the leg.
3. Lay the first leg on the 2" × 6" so that the angles match and mark and cut the other legs.
4. Cut all other materials in the cutting list except the angle braces. Use 5 and 5 on the framing square to mark the 45° angles on cleats.
5. Sand the tabletop and seat boards. Round the ends of boards slightly with a wood rasp.
6. Apply a primer coat of exterior paint so that all surfaces are protected.
7. Place the table top 2 × 6s on the top cleats, use pieces of 1/8" paneling to space them, and square the ends.
8. Be careful to keep the tabletop square. Position the top cleats 10" from the ends of the tabletop. Drive one 16d nail half way into each 2 × 6 tabletop board at both top cleats. Have the teacher check to see that the top is square and the top cleats are positioned correctly. drive a total of three 16d nails in each 2 × 6 tabletop board at both top cleats.
9. Space legs and seat cleats as dimensioned in the drawings. Place a straightedge at the bottom of the legs to be sure the legs are at the correct angle. Drive two 16d nails in each leg-seat cleat joint. Drill two 3/8" holes in each joint. Insert 3/8 × 3½" zinc coated carriage bolts and tighten. The second set of legs can be assembled by laying them on top of the first for proper alignment.
10. Set legs under tabletop and fasten top of legs to top cleats with C-clamps. Check tabletop lengthwise and crosswise with a level. If necessary, loosen C-clamps to adjust for a level tabletop. (Note: Be sure the legs are centered under the tabletop.) Have the teacher check this before drilling holes.
11. Drill two holes in each of the leg-top cleat joints. Insert 3/8" × 3½" carriage bolts and tighten.
12. Position top spacers under the center of the tabletop and hold with C-clamps while you nail each tabletop board to it.
13. Plumb legs, cut angle braces to fit, and insert braces as shown in the drawings.
14. Place seat boards on seat cleats and nail. (Note: The end of the seat should be 10" from the outer edge of the seat cleat.
15. Sand th table top and seat boards to prepare for the finish coat.
16. Finish the table with one more coat of nonchalking exterior paint.

Name _____

Lab Sheet

Project Plan Form

BILL OF MATERIALS

LUMBER

Number	Dimensions	Grade and Species of Wood	Cost

FASTENERS

Number	Size	Kind of Fastener	Cost

HARDWARE

FINISH

CONSTRUCTION PROCEDURE
(Steps in Constructing the Project)