Lesson A7–1

Understanding Applications of Fluids and Lubricants in Agricultural Equipment

Unit A. Mechanical Systems and Technology

Problem Area 7. Agricultural Equipment Systems

Lesson 1. Understanding Applications of Fluids and Lubricants in Agricultural Equipment

New Mexico Content Standard:

Pathway Strand: Power, Structural and Technical Systems

Standard: **I:** Apply physical science principles to engineering applications with mechanical equipment, structures, biological systems, land treatment, power utilization, and technology.

Benchmark: **I-B:** Apply principles of lubricants to sort and classify lubricants.

Performance Standard: **1.** Classify lubricants and determine applications. **2.** Identify viscosity and strengths of lubricants. **3.** Describe properties of lubricants.

Student Learning Objectives. Instruction in this lesson should result in students achieving the following objectives:

1. Identify the fuels that are used in agricultural equipment and their characteristics
2. Describe the selection and storage of fuels for agricultural equipment.
3. Identify the lubricants that are used in agricultural equipment and their characteristics
4. Describe the selection and storage of lubricants for agricultural equipment.
5. Identify the coolants that are used in agricultural equipment and their characteristics.
6. Describe the maintenance of fuel, lubricant, and coolant systems in agricultural equipment.

List of Resources. The following resources may be useful in teaching this lesson:

Recommended Resources. One of the following resources should be selected to accompany the lesson:

Hathaway, Louis. *Fundamentals of Machine Operation: Preventative Maintenance*. Moline, Illinois; Deere & Company, 1992.

Fundamentals of Service: Fuels, Lubricants and Coolants. Moline, Illinois; Deere & Company, 1992.

Phipps, Lloyd J., and Carl L. Reynolds. *Mechanics in Agriculture*. Danville, Illinois: Interstate Publishers, Inc., 1992. (Textbook, Chapters 21, 22, 23, and 26)

Other Resources. The following resources will be useful to students and teachers:

Physical Science Applications in Agriculture II: Teacher's Guide. Urbana, Illinois: University of Illinois, 1994.

List of Equipment, Tools, Supplies, and Facilities

Writing surface
Overhead projector
Transparencies from attached masters
Copies of student lab sheet
Examples of oils, greases, and coolants
Examples of new and worn out or damaged parts

Terms. The following terms are presented in this lesson (shown in bold italics):

Ash content
Bottom dead center
Cloud point
Compression ratio
Coolant
Dispersants
E-10 blend
E-85 fuel
Flash point
Multi-grade
Multi-viscosity
Octane rating
Oxidative stability
Pour point
Top dead center
Thermostat

Viscosity
Volatility

Interest Approach. Use an interest approach that will prepare the students for the lesson. Teachers often develop approaches for their unique class and student situations. A possible approach is included here.

Display different types of fuels, lubricants or coolants to the class. Ask students to identify the items and their purposes. Lead a discussion dealing with the selection of the proper materials for the systems.

Summary of Content and Teaching Strategies

Objective 1: Identify the fuels that are used in agricultural equipment and their characteristics.

Anticipated Problem: What are the fuels used in agricultural equipment and their characteristics?

I. Because of the difference in the way the fuel is ignited, gasoline, diesel, and LP-gas engines require fuels with certain qualities.

   A. Gasoline is used in spark ignition engines. The charge of fuel and air is taken into the cylinder as a mixture, compressed, and ignited by the spark plug. The compression ratio for gasoline engines is from 8 to 1 or 9 to 1.

      1. ***Compression ratio*** is the relation between the total volume inside the cylinder when the piston is at bottom dead center compared to when it is at top dead center.
      2. ***Bottom dead center*** is when the piston is at its greatest distance from the cylinder head.
      3. ***Top dead center*** is when the piston is closest to the cylinder head.
      4. The higher the compression ratio, the more the fuel-air mixture is compressed and the higher the pressure inside the cylinder before the fuel burns. If the fuel burns properly, higher compression greatly increases the power output of the engine because more of the fuel energy is developed into useful power.

   B. There is no spark to start the fuel burning when diesel is used. The air is compressed until it is so hot that fuel injected into it will spontaneously start burning.

      1. During injection, it is vital that the atomized fuel particles are fully mixed with the molecules of hot compressed air so that the maximum possible number of ignition points are created throughout the charge to provide early and uniform ignition.
      2. The compression ratios for diesel engines are much higher than spark-ignition engines. The average compression ratio is 16 to 1 and vary from as low as 14 to 1 to as high as 20 to 1.

C. LP-gas is either all propane or mostly propane because of the high demand for butane in the chemical industry.
   1. Both products are gases and cannot be used through a regular gasoline tank and carburetor. They must be stored and handled in high-pressure containers to keep them in liquid form.
   2. Machines equipped for LP-gas use the vapor in the top of the fuel tank for easy starting because it is already vaporized.
   3. Compression ratio is from 8 to 1 to as high as 10 to 1.

D. Much effort has gone into the development of alternative energy sources which are renewable, less polluting, and more dependable.
   1. Ethanol, one of a large group of substances called alcohols, is a liquid which can be used as a fuel in neat form or blended with gasoline, and as a raw material in industrial and technological processes. Ethanol is a product of fermentation, a process by which many organisms derive energy from sugar. In its neat or pure form, ethanol is a colorless, water like, liquid with a mild odor that can be used in specially designed vehicles.
      a. When used as an automotive fuel, one unit of ethanol is usually mixed with nine units of gasoline to provide an ***E-10 blend***.
      b. Gasoline containing 85 percent ethanol is known as ***E-85 fuel***.
   2. Biodiesel is a diesel fuel replacement derived from renewable agricultural feedstocks such as soybean oil, animal fats, and other vegetable oils. Dr. Rudolf Diesel, inventor of the diesel engine was using 100 percent vegetable oil in diesel engines long before petroleum-based diesel fuel was ever refined.
      a. Biodiesel is made through a conventional chemical process called transesterification. This process makes biodiesel and a by-product called glycerine. Glycerine has several commercial applications from toothpaste to environmentally friendly antifreeze.
      b. Biodiesel is biodegradable, non-toxic and greatly reduces engine emissions compared to petroleum-based diesel. Biodiesel may be used as 100 percent replacement for standard diesel fuel or it can be easily mixed with conventional diesel fuel. Power, acceleration, and fuel consumption results are similar to those of petroleum-based diesel fuel. Biodiesel emission is lower than traditional fuels. Biodiesel in its pure form is totally biodegradable and the flash point is higher than petroleum diesel, making it safer to handle and store. ***Flash point*** is the temperature to which fuel must be heated to create a sufficient mixture of fuel vapor and air above the surface of the liquid so that ignition will occur when the mixture is exposed to an open flame.

Use TM: A7–1A to illustrate compression ratios. An alternative approach is to transfer the information from the transparency masters to a multimedia presentation. Use text material to strengthen student understanding of concepts. Part 1 in Fuels, Lubricants and Coolants and Chapter 3 in Preventative Maintenance is recommended.

Objective 2: Describe the selection and storage of fuels for agricultural equipment.

Anticipated Problem: How is fuel for agricultural equipment selected and stored?

II. It is important to understand the principle qualities that make a fuel satisfactory.

A. Most new one-fuel gasoline engines are designed to operate on regular grade leaded or lead-free gasoline. Regular grade leaded or lead free gasoline, purchased from a reliable dealer, will almost certainly have the grade and quality of the fuel needed for your engine.

B. Important qualities to look for when selecting fuels are:

1. The ***octane rating*** is a method of comparing the anti-knock qualities of fuels used in a spark-ignition engine with standard test fuels. Fuels with the least tendency to knock have higher octane numbers, while fuels near the zero end of the scale frequently have a tendency to knock.

a. The names premium, regular, and low grade are rough comparative measures of octane ratings.

b. Most manufacturers design their engines to use regular grade gasoline.

c. Premium grade gasoline can be used, but there is usually no advantage since most engines are not designed for and do not have a high enough compression ratio to benefit from the higher octane rating which is more expensive.

2. ***Volatility***, the tendency to change from a liquid to vapor or evaporate, is the gasoline property which is most important in engine starting and performance. If the volatility is too low, insufficient vapor can affect starting. Gasoline with too high a volatility is apt to cause carburetor icing and vapor lock under adverse atmospheric conditions. Oil companies blend their gasoline differently during the year. Higher summer temperatures will allow the engine to start without the gasoline having high volatility. During the winter an engine will be slow to start unless the gasoline vaporizes readily, so the gasoline is blended for higher volatility.

3. High oxidation stability and freedom from gum is the third quality to consider when selecting gasoline. The tendency of gasoline to form gum in storage is an indication of its ***oxidative stability***. Most gasoline is adequately stabilized by antioxidant additives that minimize gum formation and lead anti-knock decomposition.

a. Freedom from dirt and moisture is mostly a matter of how gasoline is handled and stored.

b. Additives have become essential ingredients of modern gasoline. Additives are used to raise octane number and to combat surface ignition, spark plug fouling, gum formation, rust, carburetor icing, deposits in the intake system, and intake valve sticking.

4. When selecting LP gas, little can be done except to deal with a reliable distributor. Fuels should be relatively free from sulfur compounds and other contaminants which may cause difficulties such as filter plugging or valve failures.

5. The refining processes used to produce diesel fuel must be controlled to insure the proper characteristics and maintain the uniformity of the product.
   a. The American Society for Testing Materials (ASTM) has established a classification of diesel fuels for various types of diesel engine service. The major grades are No. 1-D and No. 2-D. Grade No. 1-D diesel fuel is the class of volatile fuel oils from kerosene to the intermediate distillates. These fuels are for use in high-speed engines in services involving frequent and relatively wide variations in loads and speeds, and also where abnormally low fuel temperatures are encountered.
   b. Grade No. 2-D diesel fuel is the class of distillate gas oils of lower volatility. These fuels are for use in high-speed engines in services involving relatively high loads and uniform speeds, or in engines not requiring fuels having the higher volatility or other properties specified for Grade No. 1-D.
   c. The method for determining the ignition quality of diesel fuel is in terms of a cetane number. The scale of cetane number represents blends of two pure hydrocarbon reference fuels. The aromatic hydrocarbons are low in cetane number, the paraffins have a high cetane number, and the naphthenes fall somewhere in between. Cetane is a hydrocarbon with very high ignition quality and represents the top of the scale with a number of 100. The hydrocarbon called alphamethylnaphthalene has very low ignition quality and represents the bottom of the scale with a cetane number of zero. Blends of the two hydrocarbons represent intermediate ignition qualities, and their cetane number is the percentage of cetane in the blend. The desirable cetane number is established by the requirements for good ignition quality during starting and light load operation at low temperatures.
      i. High cetane fuels permit an engine to be started at lower air temperatures, provide faster engine warm-up without misfiring or white smoke, reduce the rate of formation of varnish and carbon deposits, and eliminate combustion roughness or diesel knock.
      ii. Too-high cetane numbers may lead to incomplete combustion and exhaust smoke if the ignition delay period is too short to allow proper mixing of the fuel and air within the combustion space.
   d. The distillation characteristics of a diesel fuel are essential for good combustion in the diesel engine. Volatility characteristics influence the amount and kind of exhaust smoke and odor.
   e. The components of the blend, which boil at the highest temperatures, have higher heating values than do the lighter fractions. Too many heavy fractions in the final product may improve fuel economy, but can be harmful due to deposit formation within the engine. Too many light fractions may provide easier engine starting and more complete combustion under a variety of engine conditions. However, the light ends are generally low in ignition quality and they do not release as much energy per gallon as do the heavier fractions.

f. Diesel fuel must be able to flow at the lowest expected atmospheric temperatures. The lowest temperature at which fuel ceases to flow is known as ***pour point***.
   i. As fuel temperature decreases toward the pour point, the fuel becomes sluggish and harder to pump through the fuel supply lines, fuel filters, and injection system.
   ii. Low pour points can often be obtained only at the expense of lower cetane number or higher volatility. The pour-point specification should not be any lower than necessary.
   iii. Diesel fuel becomes cloudy and forms wax crystals and other solid substances at some temperature above the pour point. The temperature at which clouding begins is called the ***cloud point***. The wax crystals clog fuel filters and supply lines, and since this occurs at temperatures above the pour point, the cloud point may be even more important in a fuel specification than the pour point.

g. Diesel engine injection pumps perform most effectively when the fuel has the proper body or viscosity. ***Viscosity*** is a measure of resistance of a fluid to flow. Lower viscosities may require more frequent maintenance of injection systems parts. High viscosity may cause excessively high pressures in the injection system.

h. The gravity of diesel fuel is an index of its density or weight per unit volume. The denser the fuel, the higher is its heat content.

i. The flash point is the temperature to which the fuel must be heated to create a sufficient mixture of fuel vapor and air above the surface of the liquid so that ignition will occur when the mixture is exposed to an open flame.

C. The tendency of a diesel fuel to form carbon deposits in an engine may be roughly approximated by determining the carbon residue of the fuel. ***Carbon residue*** is the amount of material left after evaporation and chemical decomposition of the fuel have taken place at an elevated temperature for a specified period of time.

1. High carbon residue values indicate the possibility of increased combustion chamber deposits and exhaust smoke.
2. Diesel fuels contain varying amounts of sulfur, depending on the crude oil source, refining processes, and grade. Sulfur tends to be more prevalent in the higher boiling range fractions. High sulfur content can become a problem in diesel engine operation at low temperatures and during intermittent engine operation.
3. Small amounts of non-burnable material are found in diesel fuel in the form of soluble metallic soaps and abrasive solids. The amount of these materials in a diesel fuel measures the ***ash content*** of the fuel.
4. Diesel engine injectors are precision-made units of extremely close fits and tolerances, they are sensitive to any abrasive material in the fuel.

D. When storing fuels, the type of fuel to be stored will determine the method of storage. Each state has its own laws regarding the handling, storage and use of fuels. It is important to become acquainted with them for safety and insurance purposes. State laws are

based on the standards and codes established by the National Fire Protection Association. Proper storing and handling of fuels can affect your safety, how easily your machine starts and how much maintenance your fuel system requires.

E. Certain conditions must be controlled in order to maintain the quality of gasoline.
   1. Evaporation losses are sizable from an above-ground tank unless you make some provision for shading it.
   2. Evaporation losses can be further reduced by use of a pressure-vacuum release vent. Before using one of these valves check with the state fire marshal for approval.

F. Gasoline will oxidize and form gum deposits if kept for long periods.
   1. Refiners of gasoline add an inhibitor that will protect the fuel for six months to a year under normal storage conditions, but the time is greatly reduced if the gasoline is exposed to sunlight and to high storage temperatures.
   2. Protect against water and dirt in the storage tank. The more the temperature of a storage tank varies the more air it breathes in and out. The fresh warm air that is breathed in may contain more moisture than it can hold when the temperature drops. This causes moisture to condense on the inside of the tank and collect at the bottom under the fuel. The water must be drained or pumped out occasionally to avoid freezing, rusting, and carburetor clogging.

G. At ordinary temperatures, LP changes to a gas unless kept under pressure. LP gas must be stored in pressure-type tanks.
   1. There is no problem of protecting fuel quality. There is virtually no evaporation from the pressure tank, nor does the fuel change chemically during storage.
   2. Since LP gas is kept under pressure and is highly flammable, rigid standards have been established.

H. Keeping the fuel free of dirt and water is very important with diesel fuel.
   1. The fuel injection system on a diesel engine is fitted with parts that are held within millionths of an inch clearance. Very fine dirt particles can ruin the parts and cause a expensive repair job.
   2. Water, which is about the same weight as diesel fuel, settles out very slowly which can cause corrosion that ruins the highly-polished surfaces of the injector nozzle.
   3. Be sure to allow 24 hours for water and dirt to settle to the bottom of the storage tank after it has been refilled.
   4. Do not let water collect on top of the fuel storage tank because water retained on the tank tends to rust the outside as fuel is drawn from the tank. Water may be drawn through the air vent directly into the fuel supply.

I. Following are ways to prevent dirt from getting into the fuel supply:
   1. Do not use an open container to transfer fuel from the storage tank to the machine tank.
   2. Do not store diesel fuel in a galvanized tank. Galvanized is fine for gasoline, but diesel fuel reacts with the galvanized finish, causing powdery particles to form.

3. Do not use a tank formerly used for gasoline storage. Fine dust and dirt particles that settle out of the gasoline and accumulate on the bottom of the tank mix with diesel and may remain suspended in it until drawn from the tank.
4. Do not let the suction pipe to the fuel pump extend to the bottom of the storage tank. Be sure the end of the pipe is 3 to 4 inches from the bottom. If possible, slope the tank away from the pipe or outlet valve.
5. Always drain the storage tank before refilling and clean it regularly
6. To keep gum and varnish tendencies from occurring, keep the storage tank shaded from direct sunlight.

Use TM: A7–1B, A7–1C and A7–1D to help students understand fuel characteristics, storage, and the control of evaporative losses. An alternative approach is to transfer the information from the transparency masters to a multimedia presentation. Use text material to strengthen student understanding of concepts. Part 1 in Fuels, Lubricants and Coolants and Chapter 3 in Preventative Maintenance is recommended.

Objective 3: Identify the lubricants that are used in agricultural equipment and their characteristics.

Anticipated Problem: What are the lubricants used in agricultural equipment and what are their characteristics?

III. There are several lubricants with specific purposes that are used in agricultural equipment.

A. Special oils have been developed for each type of engine, for each type of machine and for each season.

1. Engine oils have several functions. They keep a protective oil film on moving parts to resist corrosion and rusting. Oil reduces friction and wear caused by metal-to-metal contact of moving parts.
2. To prevent metal-to-metal contact, the oil must maintain enough viscosity or thickness to provide a film or cushion between the moving parts under all operating temperatures. In spite of high heat, the viscosity must be no higher than necessary in order to give good starting and to provide the least friction under sustained running.
3. Wear also results from acid corrosion, rusting, and from the abrasion of contaminants.
4. Engine oil is responsible for cooling moving parts. Piston cooling is done by direct heat transfer through the oil film to the cylinder walls and on to the cooling system by carrying heat from the underside of the piston crown and skirt to the engine crankcase.
5. Oils of equal viscosities have the same heat conductivity, but the oil must have enough heat stability to resist decomposition when in contact with these surfaces. Engine oil helps the piston rings to seal the high pressures of combustion by forming an oil film on the piston and cylinder walls.

6. Oil keeps parts clean. The oil must prevent the formation of contaminants which are primarily unburned or partially unburned fuel, but corrosive acids and water are frequently present. If not prevented, oil must keep contaminants in suspension so they do not settle inside the engine.

B. There are several classifications of oil.

1. SAE Viscosity is established by the society of Automotive Engineers.
2. API Service Classification is established by the American Petroleum Institute.
3. MIL Specification is prepared by the Ordnance Department of the U.S. Army, Navy and Air Force.
4. ASTM Engine Sequence Tests are procedures established by the American Society for Testing Materials.

C. Oil viscosity is a measure of the fluidity of oil at a given temperature. Oils vary in viscosity as temperature changes, becoming more fluid as temperatures increase and less fluid as temperatures decrease. The lighter or more fluid oils are intended for winter use. All W-grade oils are specifically tested under cold conditions to assure cold temperature performance. Oils are compounded to behave as light oils at cold temperatures and as heavier oils at high temperatures. These oils are called ***multi-grade*** or ***multi-viscosity***. One multi-viscosity oil can replace as many as four or five single-grade oils and can give protection at both high and low temperatures.

1. Multi-grade oils are formulated by starting with a base oil of the lower viscosity grade to which viscosity index improvers called polymers are added. The polymers do not significantly affect low temperature viscosity, but expand with increasing temperatures causing an increase in viscosity. Lower viscosity can lead to easier starting and improved fuel economy during warm up. Higher viscosity at high temperatures controls oil consumption as well or better than the corresponding single grade.
2. Oil requirements for diesel engines differ substantially from those for gasoline engines primarily due to the operating temperatures and conditions of use.
3. The requirements are very similar, additives that perform acceptably in one type of engine may not perform to the same degree in the other type of engine.
4. The sulfur content of diesel fuel is a problem. Diesel engine oils must help protect against the formation of sulfuric acid which causes corrosion.

D. Contaminants seriously hamper good lubrication, regardless of the oil's original quality.

1. Dust, an external contaminant, is breathed in with the combustion air. Similar material also enters the engine crankcase by the breathing action taking place there.
2. In diesels, fuel soot particles from combustion enter the crankcase oil with blowby gases.
3. Microscopic metal particles also get into the oil as a result of normal engine wear. As foreign particles accumulate, increased wear soon results in the cylinder bore, on piston rings, and within bearings, even though the best oil was used originally. Restricted oil flow and in combination with water and oxidized products form sludge.

E. Oil companies have helped in the fight against contaminants by introducing additives into the oil. Special oil additives are put into lubricating oils to provide the extra performance required of today's high-speed engines.

1. Anti-scuff additives help reduce the number of metal particles resulting from engine wear.
2. Anti-corrosion additives help to prevent failure of alloy bearings from corrosive acids which are formed as a normal by-product of combustion.
3. Anti-rust additives prevent rusting of metal parts during storage periods, downtime, or even overnight. They also neutralize acids so they are no longer harmful and cling to metal surfaces. This builds up a protective coating, which repels water droplets and protects metal from rust.
4. Detergents reduce deposit build-up.
5. ***Dispersants*** keep contaminants finely dispersed in the oil, thus not interfering with the lubricating qualities of the oil.
6. Oxidation inhibitors keep oil from oxidizing even at high temperature, prevent acids, varnish, and sludge formation.
7. Viscosity index improver helps an oil give top lubricating protection at both low and high temperatures.
8. Pour point depressant additive prevents wax crystals from congealing in cold weather and forming clumps.
9. Extreme pressure additive assures lubrication where extreme pressures between close tolerance and metal-to-metal surfaces are encountered.
10. Foam inhibitor additive prevents air bubbles which would otherwise restrict lubrication.

F. Gear oils are those used in enclosed gear boxes to lubricate mechanical transmissions, differentials, and steering gears.

1. To perform satisfactorily under today's conditions, most gear oils should have several properties.
   a. Extreme pressure properties are required in gear systems where hypoid, heavily loaded spiral-bevel and worm gear combinations are used.
   b. Gear lubricants must be chemically stable to resist oxidation and sludge formation under sustained heat with violent agitation and air foaming.
   c. Extreme pressure agents are chemically active and protect gear teeth by coating them.
2. Discoloration of gears and internal parts frequently occurs, but this does not indicate abnormal corrosion.
3. Foam resistance is mandatory in gear lubricants because of the violent agitation of the oil.
4. Because of the wide variation in both ambient and gear case temperatures, a higher viscosity is desirable.

5. The pour point must be low enough to provide lubrication at the lowest anticipated temperature.
6. Gear oils should be fluid enough at the lowest operating temperature to flow and cover moving parts, rather than to form a channel in which the gears can move free of lubricant.
7. SAE numbers of gear oils are higher than the SAE numbers of engine crankcase oils. Differentials in some machines are located in a case with the transmission and use the same oil supply, while in other machines the differential and final drive are a separate unit and may use separate oil supplies.

G. Fluids for automatic transmissions, torque converters, hydraulic systems and transmission-hydraulic units have different responsibilities. Automatic transmission fluid serves several different jobs. These jobs include:
   1. Protecting heavily-loaded helical and spiral gears with an oil film.
   2. Performing as a non-foaming fluid in transmitting power.
   3. Operating as a hydraulic fluid between –30 and 300 degrees F.
   4. Acting as a wet clutch and transmission lubricant to provide smooth, silent engagement, without slipping.
   5. Resisting oxidation under conditions of heat and aeration, while at the same time being compatible to all metals, rubber seals, gaskets, adhesives, facings, and liners in the system.

H. A number of farm and industrial manufacturers have designed machines with a common reservoir for the transmission and hydraulic systems.
   1. The same lubricating fluid may have to serve the gear train, differential, hydraulic clutches, disk brakes as well as the hydraulic system and power systems.
   2. The primary function of hydraulic fluid is to transmit power.
   3. The fluid must be stable over long periods and must protect the machine against rust and corrosion, act as lubricant, heat absorber, and be readily available and economical.
   4. Viscosity is the single most important property of a hydraulic fluid. Too-low viscosity oils can cause leakage, while too-high viscosity can cause sluggish operation, heating, and high pressures.
   5. Hydraulic fluids are subject to heat, agitation, and aeration, which are ideal conditions for oxidation and deterioration. In well-kept systems, where there is little fluid loss, and the oils will be in service for long periods, oxidation inhibitors are very necessary.
   6. Rusting and acid are the two types of corrosion found in hydraulic systems. A very potent rust inhibitor is necessary for hydraulic systems, since the system is vented and it is impossible to prevent reservoir breathing and taking in moisture and condensation which causes rusting.
   7. Oil coolers can eliminate conditions for oxidation of oil products, which results in acid corrosion.

8. Pour point is of prime importance to mobile and outdoor equipment. Winter temperatures fall far below the natural pour point of most oils, so the oil must be fortified with pour point depressants to allow it to flow at sub-zero temperatures.
9. Foaming in hydraulic fluids can be caused by excessive agitation in the presence of air, by air leaking into the system, or by contaminants such as dirt and water.
10. Most hydraulic fluids contain a small amount of silicone material that does not prevent foaming but causes the foam to be very unstable and break down rapidly.
11. Hydraulic pumps are very susceptible to wear. Manufacturers recommend oils that contain anti-wear compounds. Seals in the hydraulic system contain rubber and other materials which could deteriorate if oil contains harmful materials.

I. Lubricating grease is normally a blend of lubricating oil and soap with stabilizers and additives. The kind of soap determines the special properties of the grease.
   1. Calcium soap is used for pressure gun or chassis grease.
   2. Sodium soap is used for wheel bearing grease.
   3. Lithium soap is used in multi-purpose grease.
   4. Many additives in grease are similar to those in oils: oxidation and corrosion inhibitors, and anti-scuff agents. Some special grease additives contain non-soap thickeners, chemical stabilizers and those which increase the dropping point or when grease liquefies.
      a. Fillers are sometimes added to grease to add bulk and to harden the grease.
      b. High temperature grease is formulated to resist heat and do not liquify. Special thickeners are used in place of the conventional soaps to get this quality.
      c. Extreme pressure grease has the ability to maintain a film on metal surfaces to prevent wear under high sliding loads or slow motions in the mechanism. Molybdenum disulfide and lead naphthenate are the additives used to get this quality.
      d. The development of multi-pressure grease has made it possible for the machine operator to use one grease for almost all fittings and hand-packed bearings. Multi-purpose grease is water-resistant, will withstand high temperature, protect against rust, and is long lasting.

Use TM: A7–1E, A7–1F, A7–1G, A7–1H, and A7–1I as visual material for lecture and discussion. An alternative approach is to transfer the information from the transparency masters to a multimedia presentation. Use text material to strengthen student understanding of concepts. Part 2 in Fuels, Lubricants and Coolants and Chapter 4, 7, 8, and 9 in Preventative Maintenance is recommended.

Objective 4: Describe the selection and storage of lubricants for agricultural equipment.

Anticipated Problem: How are lubricants selected and stored for agricultural equipment?

IV. Consult the operator's manual when selecting and storing lubricants.

A. Machine operators can help in preventing early mechanical failure through proper care of the air filter elements, oil filler breather cap, crankcase ventilator, regular and frequent oil and oil filter changes, and by proper storage and handling of lubricants.

1. When adding or changing oil, be sure the correct service classification is used.
2. Lubricants should be stored in clean, closed cabinets or rooms. Covers and pour spouts on the drums or containers should be kept closed when not in use. This keeps out impurities and reduces condensation of water caused by atmospheric changes.
3. Rinse oil containers and funnels in fuel after use. Cover them to keep out dirt, or store them upside down.
4. When adding oil, clean all dirt from around the filler cap before removing it. Do the same thing before unscrewing an oil filter or filter cap.

B. The oil in a hydraulic system serves as the power transmission medium, system lubricant, and coolant.

1. Selection of the proper oil is a requirement for satisfactory system performance and life. Oil must be selected with care and from a reputable supplier.
2. When selecting hydraulic fluids, check the recommendations in the operators manual. The manufacturer has picked a fluid which meets all the needs of their system, which may vary from simple cylinders to precision hydraulic pumps.
3. Use the same care and precautions in storage and handling of transmission and hydraulic oils as recommended for engine oils. Be sure to prevent the entrance of dirt or moisture into the oil. Just a little dirt, mixed with oil, makes and excellent grinding compound.

C. Select the proper grease for the application and follow generally accepted practices.

1. Keep the grease containers in a dust-free place.
2. Wipe off the grease gun before filling it.
3. Fill the grease gun without exposing the grease to dust and dirt.
4. Always wipe off grease fittings before applying grease. Don't force dirt into a bearing. Wipe off excess grease after greasing.
5. Grease the machine at the end of the day when it is warm.

Use TM: A7–1J and A7–1K to emphasize proper lubricant storage and methods for avoiding contamination. An alternative approach is to transfer the information from the transparency masters to a multimedia presentation. Use text material to strengthen student understanding of concepts. Part 2 in Fuels, Lubricants and Coolants and Chapter 5 in Preventative Maintenance is recommended.

Objective 5: Identify the coolants that are used in agricultural equipment and their characteristics.

Anticipated Problem: What are the coolants used in agricultural equipment and their characteristics?

V. Liquid cooling systems are the most common methods used to get rid of heat.

A. Heat is the result of the combustion process in a fuel burning engine.

1. About $^1/_3$ of the heat created turns the crankshaft, $^1/_3$ is lost through the exhaust system, and $^1/_3$ removed by the cooling system. Failure to remove the heat causes engine component damage due to heat build up. Heat is removed from the cylinder, bearing, and valve or rotary components by two basic methods.

a. Air can be forced through the engine by baffles, ducts, and blowers.

b. A liquid can be circulated through the engine to carry heat away from engine components to a heat exchanger.

i. Dry sleeve liquid system includes a sealed jacket that separates the engine components from the system.

ii. Wet sleeve design directs coolant flow against the engine parts.

B. Parts of the liquid cooling system include:

1. The radiator, where heat from coolant is released to the atmosphere, provides a reservoir for enough liquid to operate the cooling system efficiently.

2. The fan forces cooling air through the radiator core to quickly dissipate the heat being carried by the coolant in the radiator.

3. The water pump circulates the coolant through the system, the pump draws hot coolant from the engine block and forces it through the radiator for cooling.

4. Some engines have distribution tubes and some have transfer holes which direct extra coolant flow to hot areas such as exhaust valve seats.

5. The fan belt transmits power from the engine crankshaft to drive the fan and water pump.

6. Connecting hoses are the flexible connections between the engine and other parts of the cooling system.

7. The ***thermostat*** is a heat-operated valve that controls the flow of coolant to the radiator to maintain the correct operating temperatures. When the coolant is cold, the thermostat closes to circulate coolant inside the engine for faster warm-ups. When the coolant gets warm, the thermostat opens to circulate coolant through the radiator for normal cooling. Use the pressure cap recommended for the system and be sure it is in good condition so that efficient temperatures can be maintained.

C. ***Coolant*** is the liquid that circulates through the cooling system carrying heat from the engine water jacket into the radiator for transfer to the outside air. The coolant then flows back through the engine to absorb more heat. Some types of coolants are:

1. Water is not a good universal solvent, but it is a necessary ingredient in the cooling system. The best coolant mixture can be weakened or made harmful to the engine because of poor water quality. Soft or softened water, ground water, and tap water can contain suspended particles and compounds such as salt, acids, and minerals that can damage the internal metals of a cooling system and internal engine parts. Water by itself is an unstable heat dissipating substance. Air bubbles in the water that are formed by heat and engine vibration can cause cavitation, corrosion, and destruction of internal engine parts.
2. Antifreeze is used when freezing temperatures are expected. If the coolant freezes it will expand and may crack the engine block, the cylinder head and the radiator, create leaks and weaken the radiator hoses. During operation, freezing can prevent circulation and cause the engine to run hot. Antifreeze solutions must meet certain requirements such as prevent freezing at lowest expected temperature, inhibit rust and corrosion of system parts, be chemically stable, prevent electrolytic corrosion, flow readily at all temperatures, conduct heat readily, resist foaming, cavitation, and corrosion. There are different types of antifreeze.
    a. Ethylene glycol antifreeze is widely used in modern pressurized systems because of its boiling point, which is higher than that of water.
    b. Propylene glycol gives somewhat less protection against freezing at lower concentrations and somewhat higher protection at higher concentrations than ethylene glycol.
    c. Glycol ether is higher in price and has an odor similar to that of ether. It has the advantage of mixing with oil if it should leak into the engine crankcase.
    d. The type of antifreeze to use is determined by the expected service, local climate, water quality, metal of the engine, additives required, engine design, and manufacturer's recommendation. When antifreeze is added, protect for the lowest expected temperatures. The usual cooling system mix is 50 percent distilled water and 50 percent antifreeze and other additives. The rate varies with the protection level desired.

Use TM: A7–1L and A7–1M to depict parts of a cooling system and a comparison of coolants. An alternative approach is to transfer the information from the transparency masters to a multimedia presentation. Use text material to strengthen student understanding of concepts. Part 3 in Fuels, Lubricants and Coolants and Chapter 5 in Preventative Maintenance is recommended.

Objective 6: Describe the maintenance of fuel, lubricant, and coolant systems in agricultural equipment.

Anticipated Problem: How are fuel, lubricant, and coolant systems for agricultural equipment maintained?

VI. Follow the manufacturer's recommendations found in the operator's manual when performing service or maintenance on the systems.

A. To achieve maximum fuel economy and horsepower, periodic service must be performed to keep the fuel system operating correctly.

1. If the carburetor is not adjusted correctly, fuel consumption can be excessive or power can be lost.
2. The strainer should be cleaned regularly.
3. Fuel filters should be changed at regular intervals.

B. The diesel fuel system requires careful service in order to keep it operating properly.

1. Servicing the injection pump and injector nozzles require special tools and equipment. The dealer or service center should perform all adjustments and repair of precision injection units.
2. The other components on the low-pressure side, fuel filters, sediment bowl and tank should be carefully monitored. Refer to the operators manual for filter change interval.
3. Each time the fuel lines or filters are drained or changed, air is left in them. This air may form an air lock which will prevent normal supply of fuel reaching the injection pump and the engine may not start or may run poorly. This air must be bled off before attempting to start the engine.

C. The lubricating system must be serviced regularly to prevent premature wear and equipment damage. This consists of checking the oil levels daily and changing the oil and filter at the proper intervals.

1. Oil contamination reduces engine life more than any other factor. Oil loses its good lubricating qualities as it gets dirty and its additives wear out.
2. Oil filters are designed into all modern engine lubrication systems to combat oil contamination. Filters are classified as either surface-type or depth-type filters depending on the way the oil moves through them.
   a. Surface filters have a single surface that catches and removes dirt particles larger than the holes in the filter.
   b. Depth filters use a large volume of filter material to make the oil move in many different directions before it finally gets into the lubricating system.
   c. There are two types of filtering systems.
      i. In the by-pass system only a portion of the oil moves through the filter as it leaves the pump. The rest goes directly to the engine bearings. As the filter becomes contaminated, less of the oil goes through and more goes around.

ii. In the full-flow system all of the oil moves through the filter unless it is partly or completely blocked because of a dirty filter or cold oil. Oil pressure builds up in the filter until the bypass valve is forced open, permitting unfiltered oil to flow around the filter and directly to the engine bearings.

3. Lubrication systems on many engines use an oil cooler to help remove heat created by the engine. Most coolers are the oil-to-water cooling type, using engine coolant to dissipate unwanted heat from the engine crankcase.

D. Anything that slows down the movement of heat from the cylinders to the cooling system may cause the engine to overheat, which may lead to damage and expensive repairs.

1. Regular maintenance of the cooling system can help to avoid the costly repairs.
2. Leaks in the cooling system can mean a loss of valuable antifreeze, which can cause the engine to overheat and become damaged.
3. Leakage into the engine crankcase can dilute the oil and form sludge which retards lubrication and causes sticking of valves, valve lifters or piston rings. To prevent leakage of coolant into the crankcase, check the cylinder head joints periodically to be sure the gasket is okay and the cap screws are tightened to specifications.
4. Three types of corrosion can attack the parts of the cooling system.
   a. Chemical corrosion is a direct chemical reaction between the coolant and the metal parts of the system. This may be caused by acids in the coolant or various oxidizing agents.
   b. Electrolytic corrosion is a reaction between two different metals joined together, in contact with a solution which conducts electricity. When selecting an antifreeze, be sure that it is not a good conductor.
   c. Erosive corrosion is the mechanical abrasion from particles such as rust, scale, and sand as they circulate rapidly through the system with the coolant. Always flush the system before installing antifreeze. Rust and other deposits in the system can shorten inhibitor life.

Use text material to strengthen student understanding of concepts. Part 1 and 3 in Fuels, Lubricants and Coolants and Chapter 3, 4, 5, 7, 8, and 9 in Preventative Maintenance is recommended.

Review/Summary. Use the student learning objectives to summarize the lesson. Have students explain the content associated with each objective. Student responses can be used in determining which objectives need to be reviewed or taught from a different angle.

Application. The following lab activity will be helpful to students in applying the lesson's content:

LS: A7–1A—Lubricating Oils: Viscosity and Temperature

Evaluation. Evaluation should focus on student achievement of the objectives for the lesson. Various techniques can be used, such as student performance on the application activity. A sample written test is attached.

Answers to Sample Test:

Part One: Matching

1 = b, 2 = f, 3 = e, 4 = c, 5 = d, 6 = a

Part Two: Completion

1. compression ratio
2. Flash point
3. volatility
4. coolant
5. Electrolytic
6. cetane number
7. Biodiesel

Part Three: Short Answer

Oils that are compounded to behave as light oils at cold temperatures and as heavier oils at high temperatures.

Sample Test Name_____

Test

Lesson A7–1: Understanding Applications of Fluids and Lubricants in Agricultural Equipment

Part One: Matching

Instructions. Match the term with the correct response. Write the letter of the term by the definition.

a. dispersants
b. octane rating
c. pour point
d. thermostat
e. viscosity
f. volatility

_____ 1. Method of comparing the antiknock qualities of fuels used in spark-ignition engine with standard test fuels.

_____ 2. The tendency to change from a liquid to vapor or evaporate.

_____ 3. A measure of resistance of a fluid to flow.

_____ 4. The lowest temperature at which fuel ceases to flow.

_____ 5. Heat-operated valve that controls the flow of coolant to the radiator to maintain the correct operating temperature.

_____ 6. Keep contaminants finely dispersed in the oil.

Part Two: Completion

Instructions. Provide the word or words to complete the following statements.

1. The relation between the total volume inside the cylinder when the piston is at bottom dead center compared to when it is at top dead center is called _____ _____.
2. _____ _____ is the temperature to which fuel must be heated to create a sufficient mixture of fuel vapor and air above the surface of the liquid so that ignition will occur when the mixture is exposed to an open flame.
3. The gasoline property which is most important in engine starting and performance is _____.
4. The medium which carries away excess heat from the engine is _____.
5. _____ corrosion is a reaction between two different metals joined together, in contact with a solution which conducts electricity.

6. The method for determining the ignition quality of diesel fuel is in terms of a _____ _____.
7. _____ is a diesel fuel replacement derived from renewable agricultural feedstocks.

Part Three: Short Answer

Instructions. Provide information to answer the following question. Use complete sentences.

What is a multi-grade or multi-viscosity oil?

COMPRESSION RATIOS

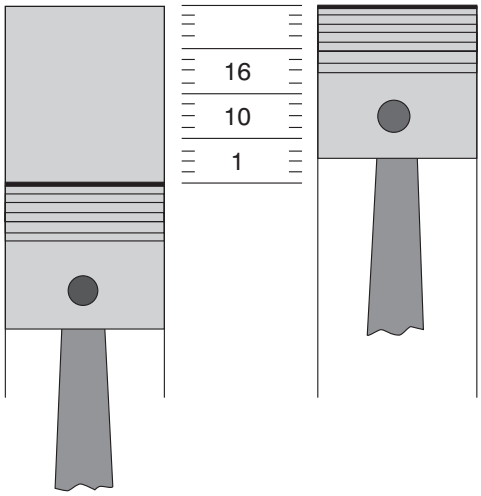

RATIO 16 TO 1
(Diesel Engine)

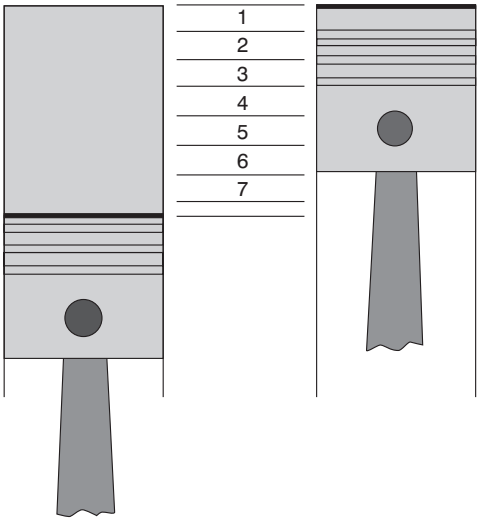

RATIO 8.5 TO 1
(Gasoline Engine)

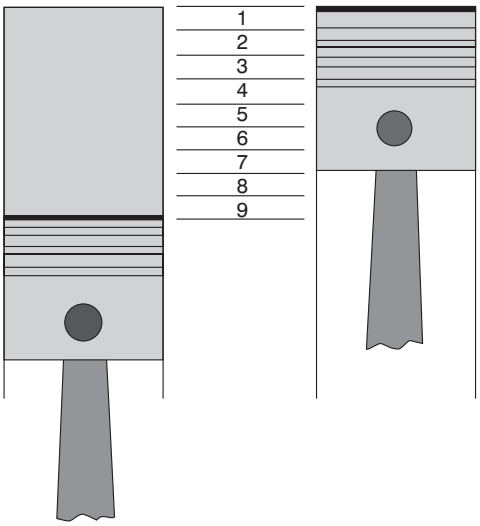

RATIO 9 TO 1
(LP-Gas Engine)

(Courtesy, Interstate Publishers, Inc.)

TM: A7–1B

FUEL CHARACTERISTICS

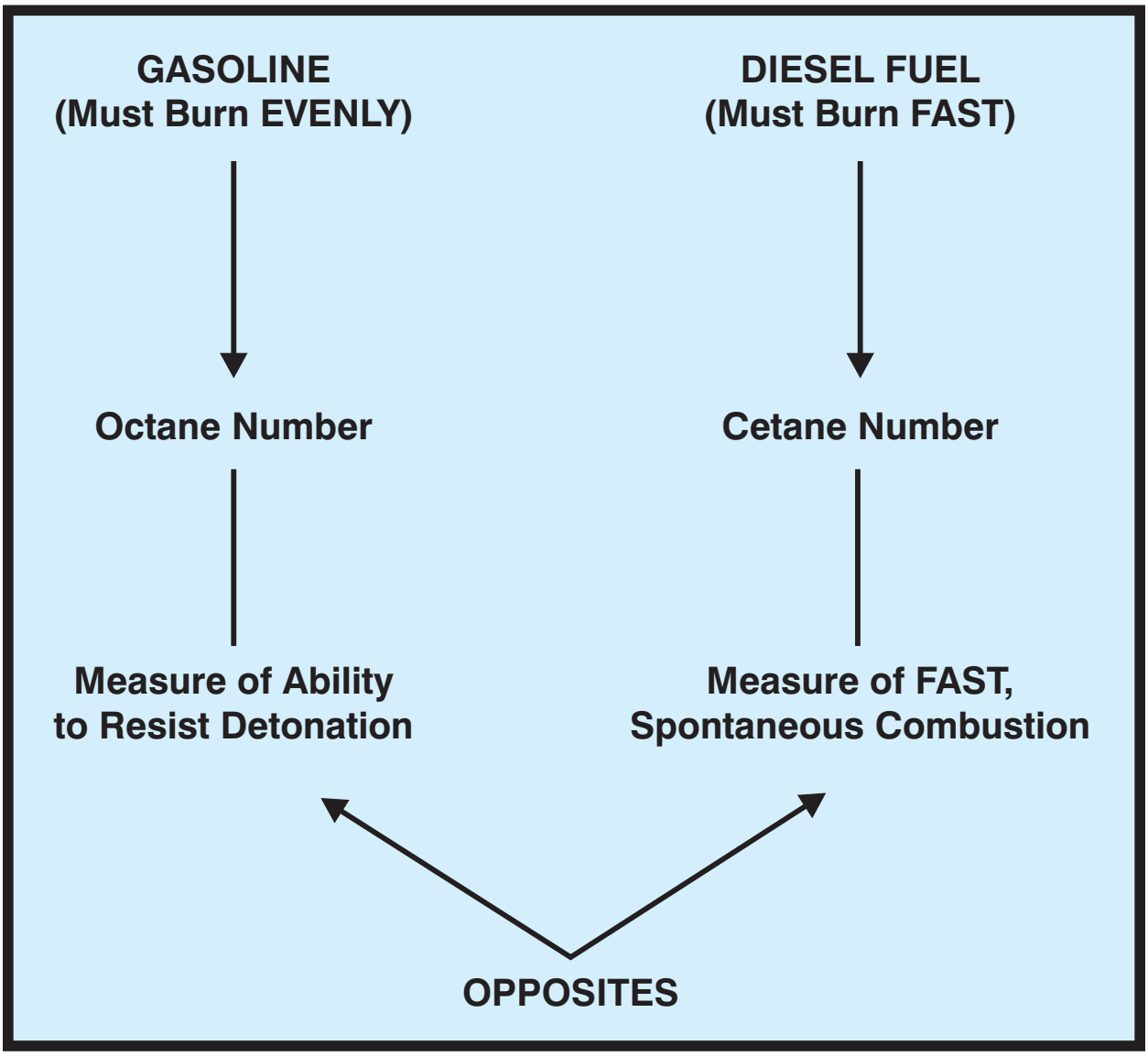

TM: A7–1C

EFFECTS OF SUN ON 300-GALLON (1,035 L) GASOLINE STORAGE TANKS

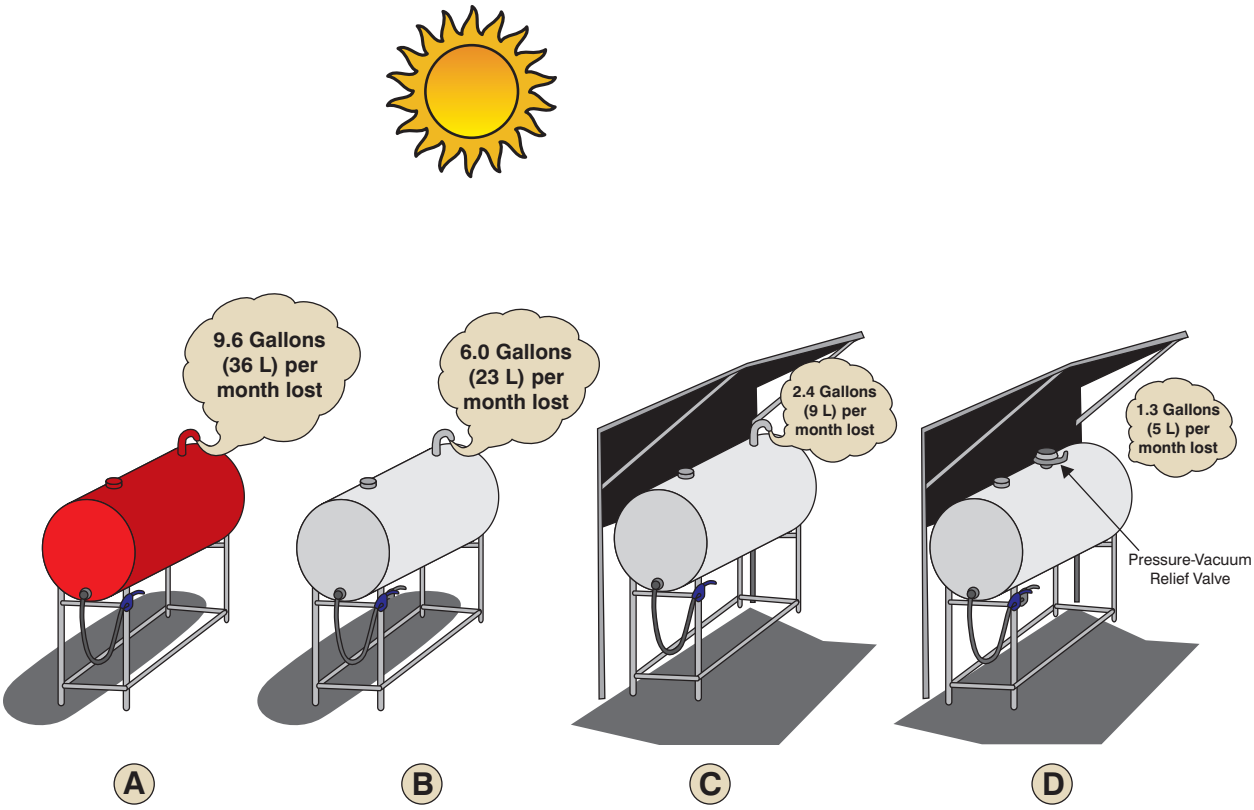

A — Red Tank Exposed to Sun's Heat

B — White or Aluminum Tank Exposed to Sun's Heat

C — White Tank Protected by a Shade

D — White Shaded Tank Equipped with a Pressure-Vacuum Relief Valve

(Courtesy, Interstate Publishers, Inc.)

CONTROLLING EVAPORATIVE LOSSES

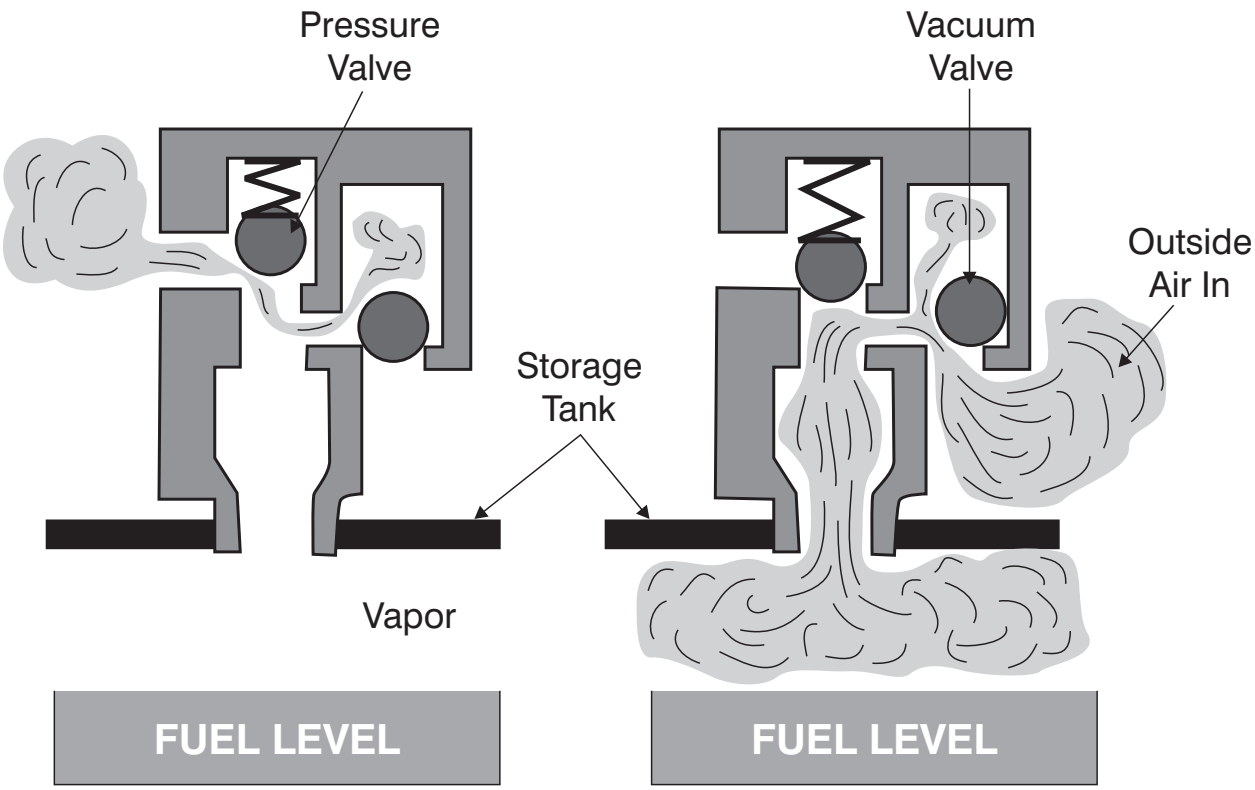

A

When tank pressure rises above 3 psi (21 kPa), ball on pressure valve rises and allows enough gasoline vapor to escape to keep pressure at 3 Psi.

B

When storage tank cools or fuel is withdrawn, vacuum may develop, causing outside air to force past vacuum valve and enter tank. This keeps pressure inside tank near that on outside.

(Courtesy, Interstate Publishers, Inc.)

TM: A7–1E

MAJOR PARTS OF A FULL-PRESSURE LUBRICATION SYSTEM

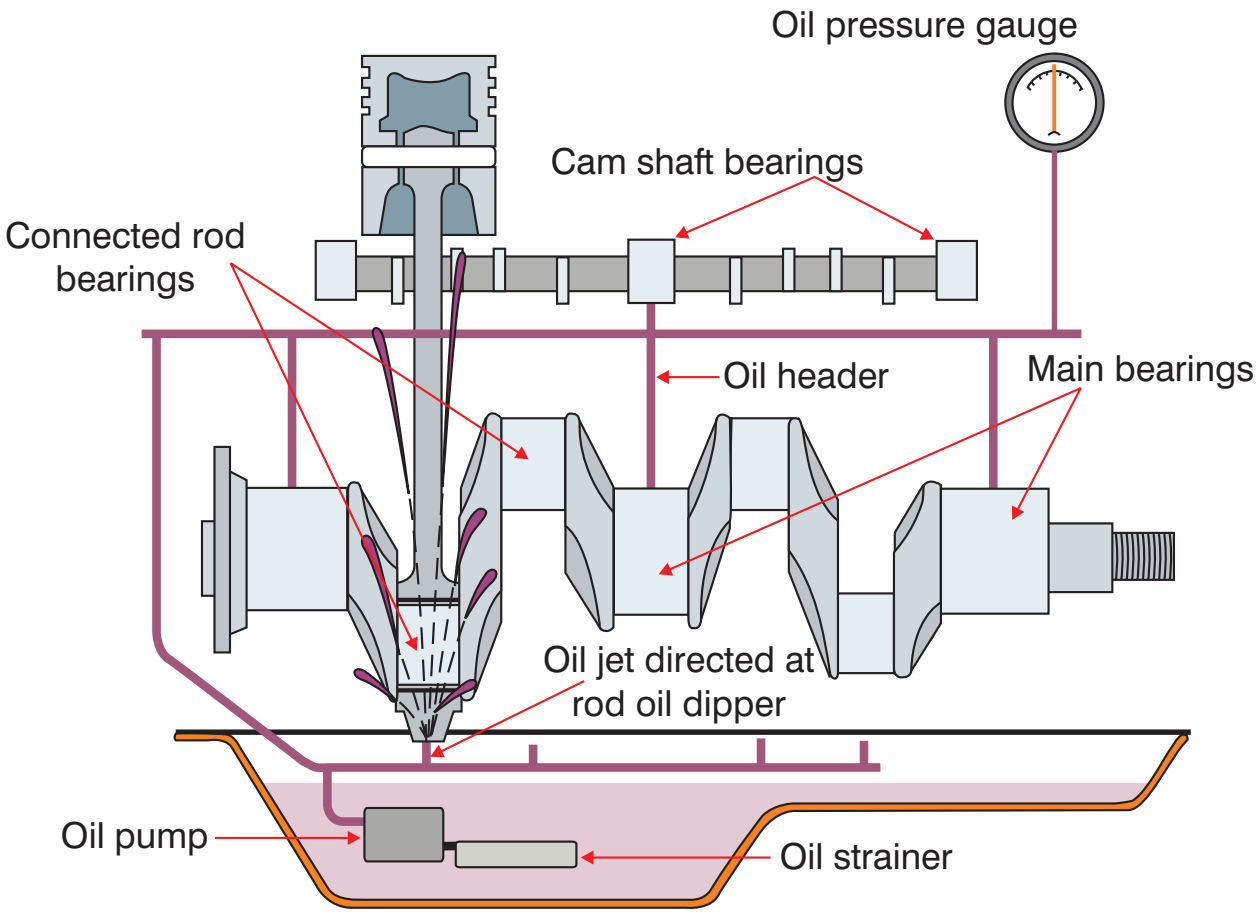

Oil helps to seal rings, clean and cool parts, and reduce friction.

(Courtesy, Interstate Publishers, Inc.)

TM: A7–1F

THE CRUDE OIL REFINING PROCESS

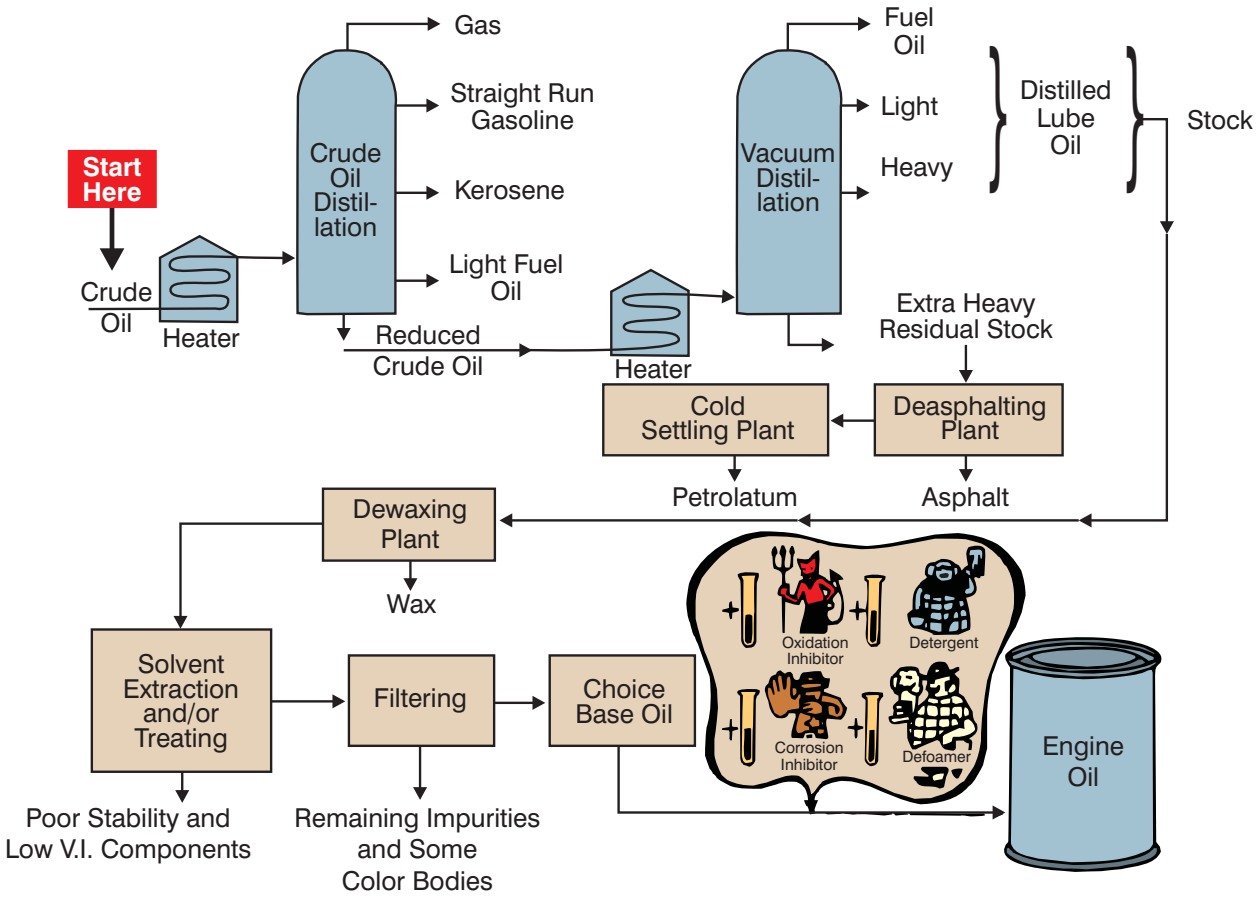

OIL VISCOSITY

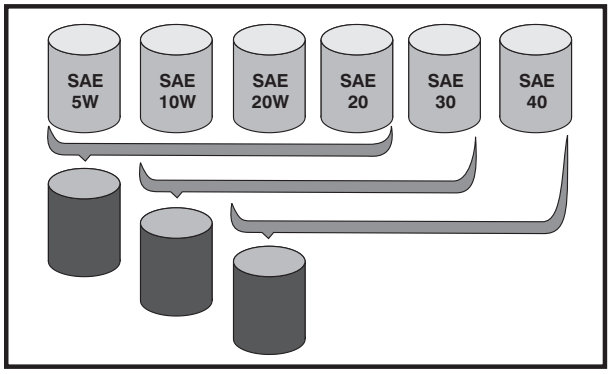

A multiviscosity oil can replace several single-viscosity oils (when recommended).

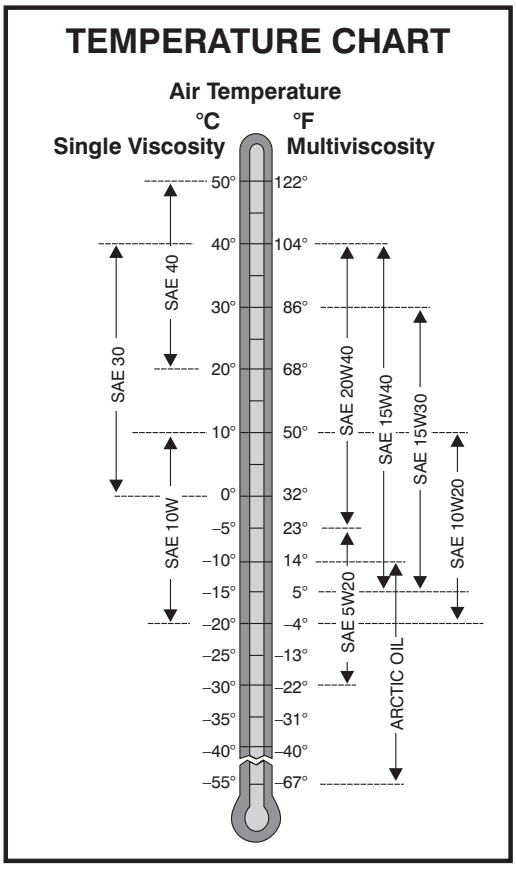

Typical oil viscosity chart.

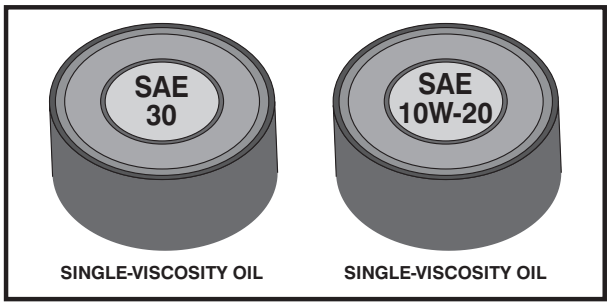

Oil viscosity is marked on oil containers.

TM: A7–1H

CONTAMINATION OF OIL

- Combustion materials
- Water, acid
- Metal burrs and chips
- Dust, sand, pieces of seals and paint
- Lint, fibers

TRANSMISSION AND GEAR LUBRICANTS

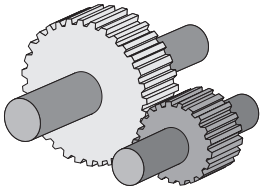

GEARS

Lower gear loads and less rubbing. Standard gears oils are often adequate.

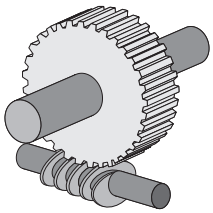

WORM GEARS

Higher gear loads and more rubbing. Special gear oils are often needed.

AXLE AND MANUAL TRANSMISSION LUBRICANT VISCOSITY CLASSIFICATION

SAE Viscosity Grade	Maximum Temperature for Viscosity of 150 000 cP[a]	Viscosity at 100°C[b] cSt	
		Minimum	Maximum
	°C		
75W	–40	4.1	—
80W	–26	7.0	—
85W	–12	11.0	—
90	—	13.5	<24.0
140	—	24.0	<41.0
250	—	41.0	—

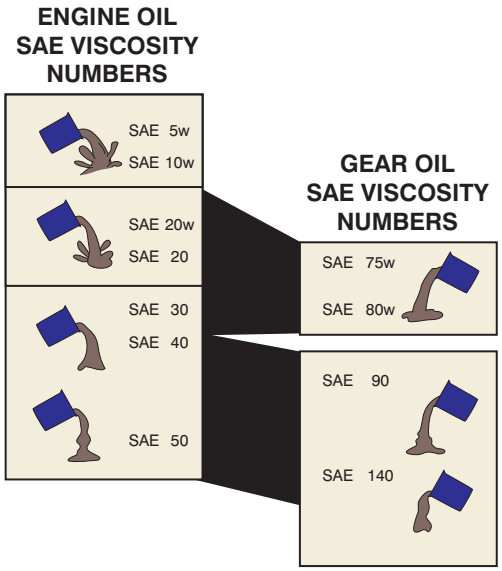

To avoid confusion, higher SAE viscosity numbers are assigned to gear oils.

TM: A7–1J

STORING LUBRICANTS

CAUSE

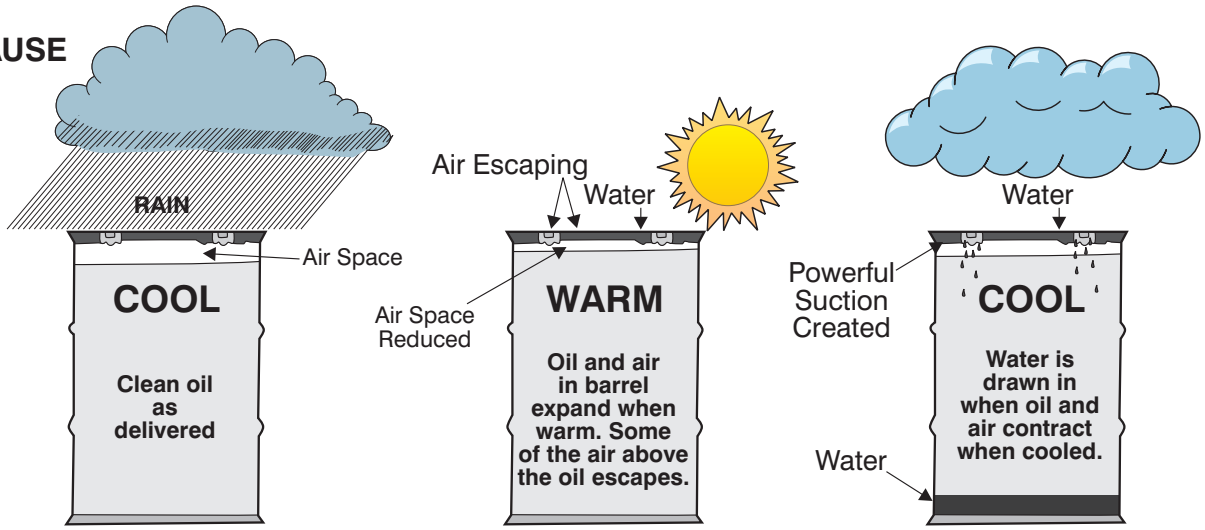

PREVENTION

1. Keep bungs drawn tight.
   Use wooden mallet to make sure.
2. Store barrels inside whenever possible.
3. If stored outside, lay barrels on their sides.
4. If barrels cannot be laid on their sides,
   tilt them slightly as shown below.

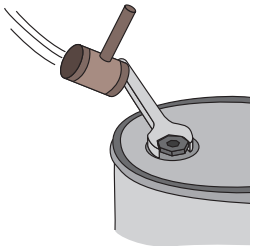

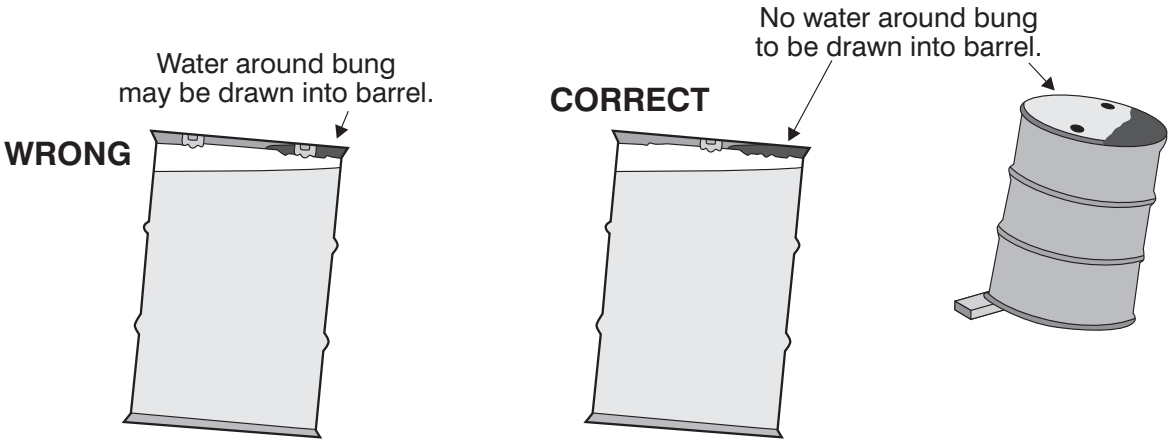

(Courtesy, Interstate Publishers, Inc.)

AVOIDING CONTAMINATION

- Drain oil at recommended intervals. If operating conditions are very dirty, drain more often.
- Use CLEAN oil, containers, and work habits.
- Replace or clean filters when recommended before they become plugged.

PARTS OF THE COOLING SYSTEM

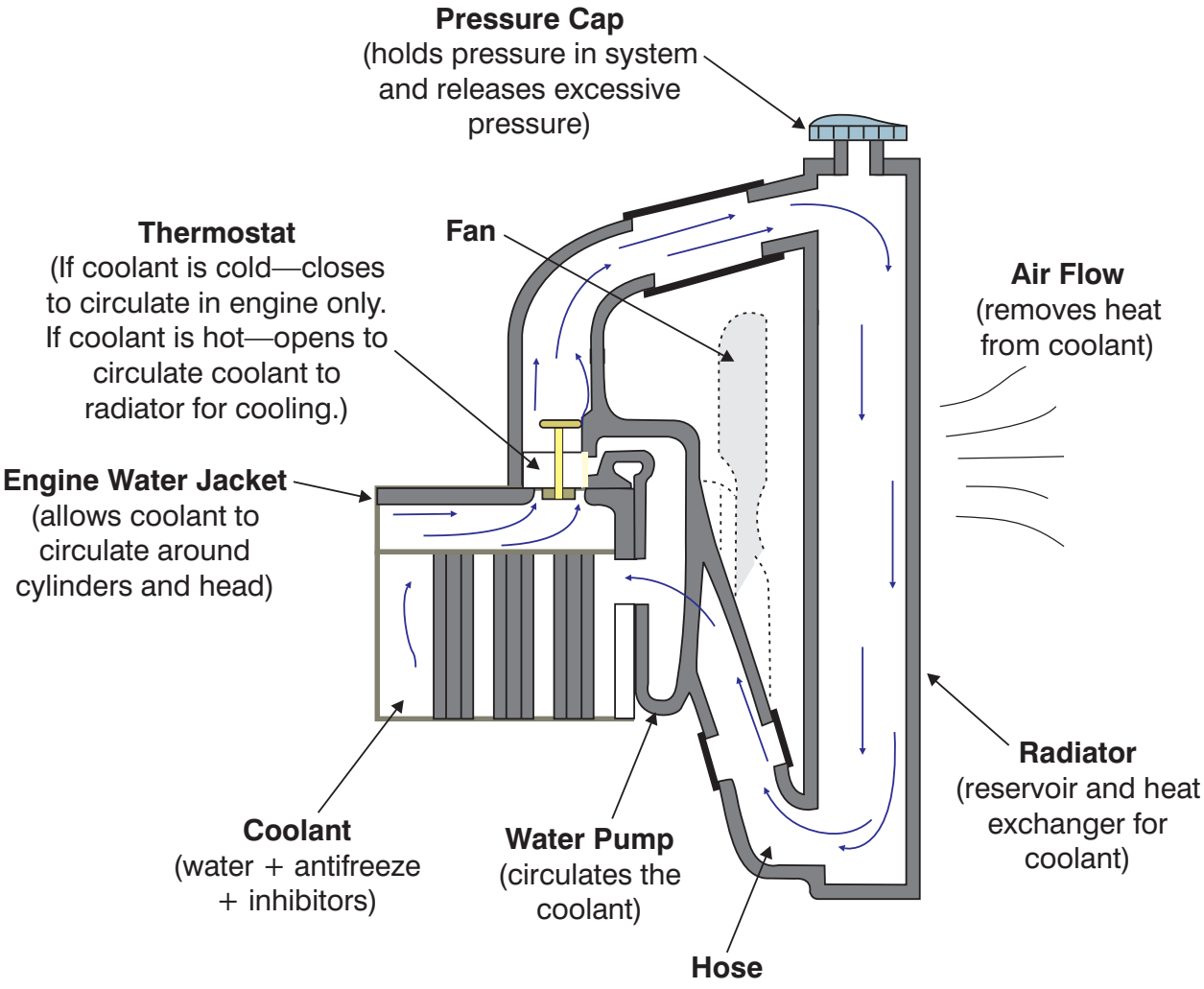

(Courtesy, Interstate Publishers, Inc.)

TM: A7–1M

COOLANT COMPARISON

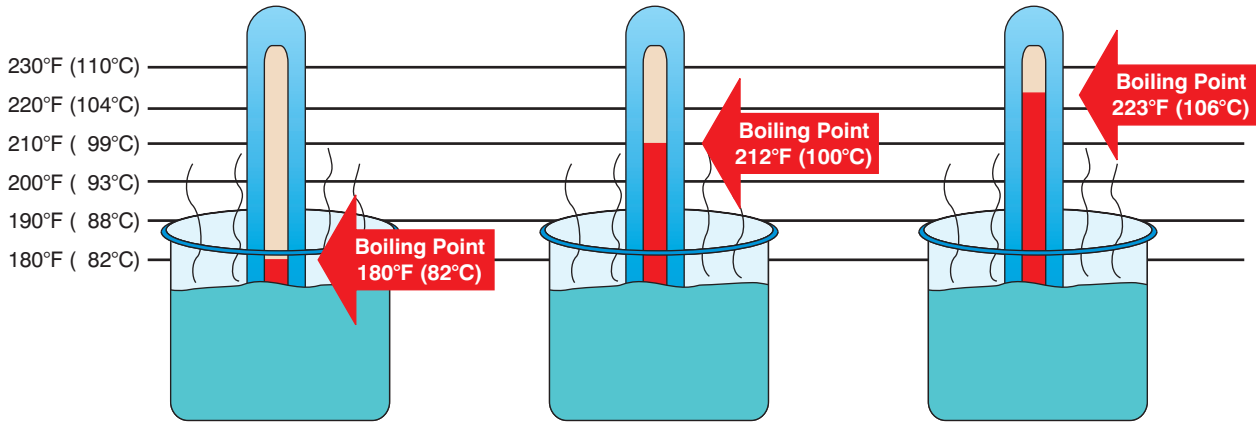

 Name_____

Lab Sheet

Lubricating Oils: Viscosity and Temperature

Objective:

Compare single and multi-grade lubricants.

Equipment:

Samples of single grade (10 and 30 weight) and multi-grade (10W–30)oils
Thermometer
Heat source
Pan
Hard plastic cup suitable for hot and cold liquids
Stopwatch
Eye protection, gloves and fire safety equipment

Procedure:

1. Drill a small hole, approximately $^1/_8$ inch, in the bottom center of the cup. Place a plug (a sharpened pencil will work) in the hole. Mark a fill/full line around the cup one inch from the bottom.
2. Select a single grade oil sample at room temperature and record the temperature of the oil.
3. Fill the cup to the fill line with the sample. Pull the plug and allow the oil to drain into a graduated cylinder. Record the volume drained at 5 second intervals for one minute or until the cup is empty.
4. Repeat steps 2 and 3 for each sample at room temperature.
5. Chill the oil samples to a temperature below freezing. All samples should be nearly the same temperature. Record the temperature and repeat step 3, recording the results.
6. Heat samples to a temperature above room but do not allow oil to burn. Hot oil can be dangerous; use extreme caution. Repeat step 3, recording the results.
7. Plot a graph volume of oil collected (ml) vs time (sec) for each temperature. Each graph should have three curves plotted; one for each samples viscosity.